REGULATORS

Modulair 105-107-112 ranges
G 1/8 to G 3/4

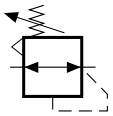



PRESENTATION

- *Wide selection of pressure regulation ranges: from between 0,2 and 0,5 bar to 3, 8 or 10 bar*
- *Ensures constant downstream pressure: rolling diaphragm, self-relieving feature*
- *Reliability and durability: low hysteresis, rolling diaphragm, no friction*

SPECIFICATIONS

FLUID : Compressed air or neutral gas

	105	107	112	112
RANGE				
PORTS	G1/8 - G1/4	G1/8 - G1/4	G1/4...G1/2	G3/4
MAX. INLET PRESSURE (bar)	12	16	16	16
CONTROLLED PRESSURE (bar)	0,5 - 8	0,5 - 10	0,5 - 10	0,5 - 12
	see table below for other values			
HYSTERESIS (bar)	0,35	0,3	0,2	0,2
AMBIENT TEMPERATURE (°C)	0°, +50°	-10°, +50°	-10°, +50°	-10°, +50°C
MAX. FLOW (Qv at 6,3 bar)	see table below and charts			

SELF-RELIEVING REGULATOR

INDIVIDUAL SPECIFICATIONS AND CONSTRUCTION

■ MODULAIR 105 range
Regulating device with **rolling** diaphragm (very low hysteresis)
Nitrile seal (NBR)
Glass-fibre reinforced polyamide body (PA)
Locking "pull-turn-push" pressure control knob

■ MODULAIR 107 and 112 ranges
Regulating device with **rolling** diaphragm (very low hysteresis)
Nitrile seal (NBR)
Painted zamak body
Locking "pull-turn-push" pressure control knob

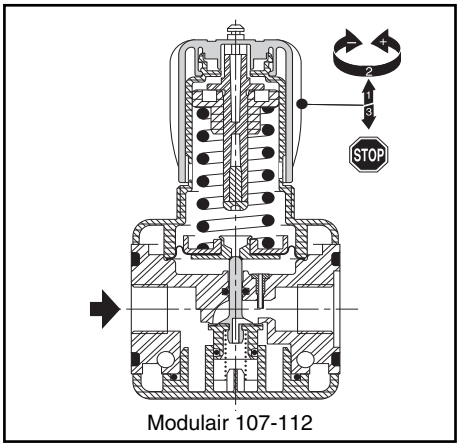

Modulair 107-112

INSTALLATION

Regulators can be installed in any position
Panel mounting possible (mounting ring: see accessories)
Fluid flow direction indicated by arrow and "IN" - "OUT" marking on body (Modulair 105).

SELECTION DU MATERIEL

port size	MODULAIR range	maximum inlet pressure	controlled pressure	flow (ANR) at 6.3 bar pressure setpoint and ΔP of 1 bar / setpoint			code		
				at upstream pressure			regulator		
		(bar)	(bar)	(bar)	l/min (ANR)	dm³/s (ANR)	Ø gauge	with pressure gauge 0-12 bar (1)	without pressure
Adjustment range: STANDARD									
G1/8	**105**	12	0,5-8	8	550	9	40	**34225007**	**34225005**
G1/4	**105**	12	0,5-8	8	650	11	40	**34225008**	**34225006**
G1/8	**107**	16	0,5-10	8	700	11,7	40	**34204037**	**34204033**
G1/4	**107**	16	0,5-10	8	1200	20	40	**34204038**	**34204034**
G1/4	**112**	16	0,5-10	10	3900	65	50	**34203058**	**34203052**
G3/8	**112**	16	0,5-10	10	5500	92	50	**34203059**	**34203053**
G1/2	**112**	16	0,5-10	10	7000	117	50	**34203060**	**34203054**
G3/4 (2)	**112**	16	0,5-12	10	7000	117	50	**34203B47**	**34203B46**
G3/4 (3)	**112**	16	0,5-12	10	7000	117	50	**34203B55**	**34203B54**
Adjustment range: LOW (0.2 - 3 bar)								**(0-4 bar pressure gauge)**	
G1/8	**105**	12	0,2-3	8	550	9	40	**34225261**	**34225259**
G1/4	**105**	12	0,2-3	8	650	11	40	**34225262**	**34225260**
G1/8	**107**	16	0,2-3	8	700	11,7	40	**34204043**	**34204039**
G1/4	**107**	16	0,2-3	8	1200	20	40	**34204044**	**34204040**
G1/4	**112**	16	0,2-3	10	3900	65	50	**34203070**	**34203064**
G3/8	**112**	16	0,2-3	10	5500	92	50	**34203071**	**34203065**
G1/2	**112**	16	0,2-3	10	7000	117	50	**34203072**	**34203066**
G3/4 (3)	**112**	16	0,2-3	10	7000	117	50	**34203B51**	**34203B50**

(1) 0-10 bar pressure gauge in Modulair 105 range, 0-16 bar pressure gauge in Modulair 112 G3/4 range - Other adjustment ranges on request
(2) Non intented for the combination
(3) Version intended for the combination of various functions (FRL - isolation valve etc ...), select the desired functions and obtain the necessary assembly kits and mounting brackets (see page 42)

Joinable regulator
common supply type Modulair 112 (see page 15)

00263GB-2009/R01
Availability, design and specifications are subject to change without notice. All rights reserved.

ACCESSORIES see page 42

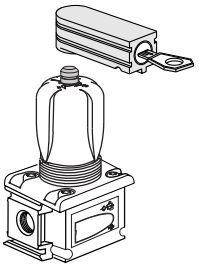

OPTIONS

- Key locking device attached to adjustment knob supplied installed on regulator, code:**662561** for Modulair 107 range, code:**662554** for Modulair 112 range. Others options or accessories, see page 46
- Adjustment range: 0.5 to 12 bar for Modulair 107 and 112 ranges (provide 50 mm dia., 0 - 16 bar pressure gauge)
- G3/4 version for Modulair 112, individual unit not for combination, controlled pressure range 0,5 – 10 bar, use code for G1/2 version + option code **662600**, example: 34203003 + 662600
- Water service (non-self-relieving) code: **662541** for Modulair 112 range
- Equipment for use in potentially **explosive atmospheres** caused by dusts or gases (ATEX Directive 94/9/EC)

zones	⟨Ex⟩ classification	gas group	ATEX option code		
			Modulair 105	Modulair 107	Modulair 112
2-22	II3GD **c** T 85°C (T6)	IIA-IIB-IIC	**612077**	**612073**	**612021**
1-21	II2GD **c** IIC T85°C (T6)	IIC	**612066**	**612064**	**612062**

PRESSURE LOSS VERSUS AIR FLOW CURVES

MODULAIR 105

G 1/8 - G1/4

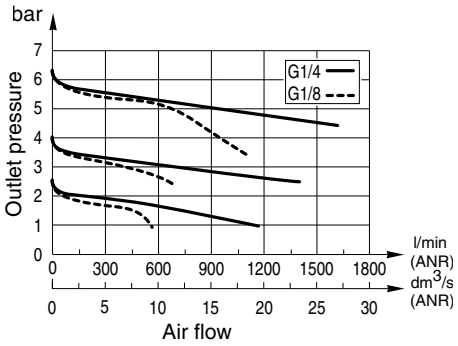

MODULAIR 107

G 1/8

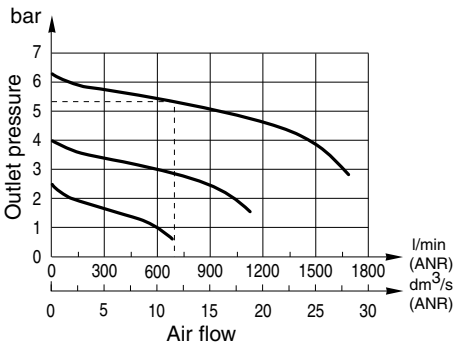

G 1/4

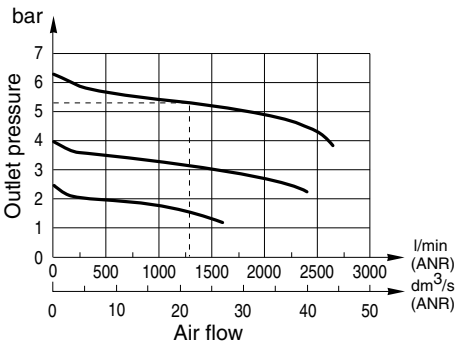

MODULAIR 112

G 1/4 ❊

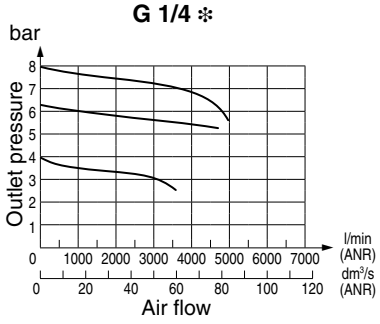

G 3/8 ❊

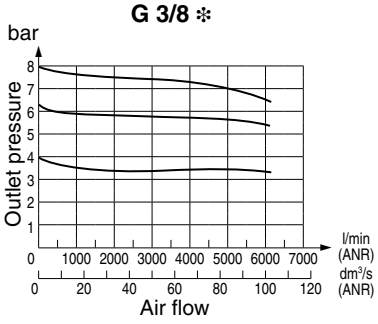

G 1/2 - G 3/4 ❊

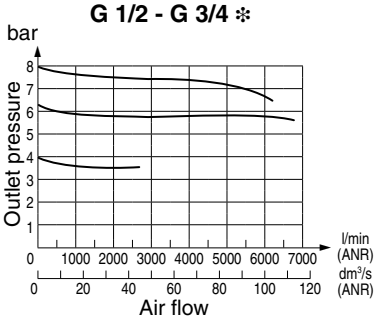

❊ according to ISO 6953 standards

00263GB-2009/R01
Availability, design and specifications are subject to change without notice. All rights reserved.

DIMENSIONS AND WEIGHTS

MODULAIR 107 - 112

G1/8 to G1/2

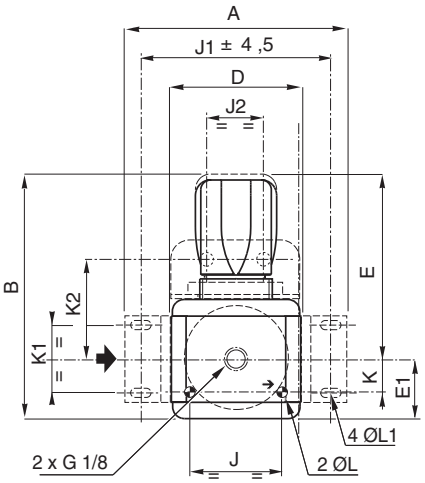

G3/4

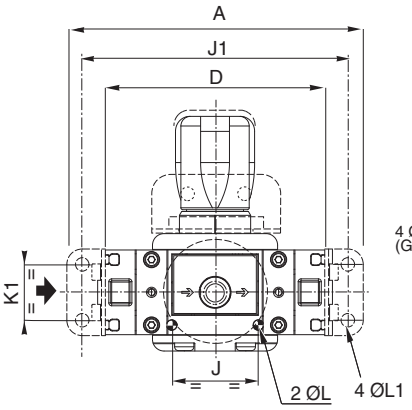

Direct frontal mounting ① or lateral (G3/4)

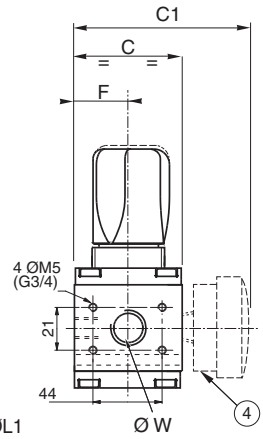

Mounting with bracket(s)

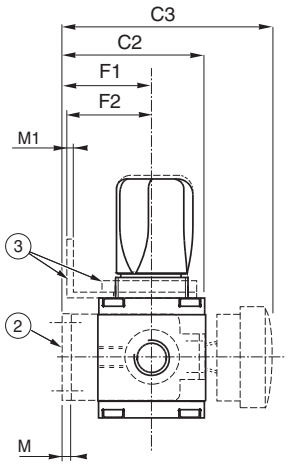

Panel mounting
hole diameter:
30.5 for Modulair 107 range
37.5 for Modulair 112 range

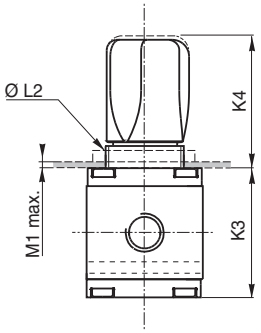

range	Modulair 107	Modulair 112	Modulair 112
Ø W	G1/8 G1/4	G1/4 G3/8 G1/2	G3/4
A	83	112	154
B	104	125	125
C	42	55	55
C1	76	87	87
C2	61	73,5	69,5
C3	95	105	101,5
D	42	66	114
E	78,5	94,5	94,5
E1	25,5	30,5	30,5
F	21	27,5	27,5
F1	40	46	42
F2	42	42	42
J	32	45	45
J1	68,5	96	138
J2	29	29	29
K	10	17	17
K1	28	33,5	29
K2	37,5	42,5	42,5
K3	51	61	61
K4	53	64	64
ØL	4,1	5,5	5,5
ØL1	4,5	5,5	7
ØL2	M30x2	M37x2	M37x2
M	3	4	2
M1	2	2	2
Weight (kg)	0,270 (1)	0,550 (1)	0,880 (1)

(1) Weight without pressure gauge

① Direct frontal mounting (G1/8 - G1/2) : 2 holes ØL and depth C
② Mounting with 2 side brackets (accessory)
③ Mounting by upper bracket and mounting ring (accessories)
④ Pressure gauge of 40 mm dia. (Modulair 107 range)
or 50 mm dia. (Modulair 112 range)

H

00263GB-2009/R01
Availability, design and specifications are subject to change without notice. All rights reserved.

DIMENSIONS AND WEIGHTS

Weight : 0,135 kg

MODULAIR 105

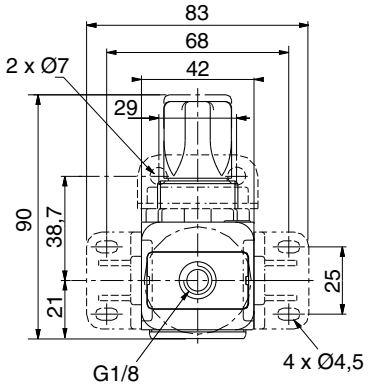

Mounting with top bracket

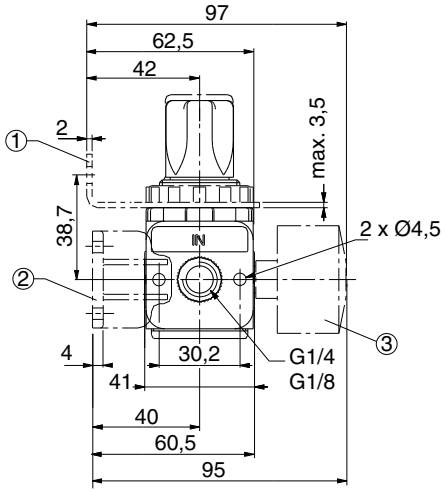

Panel mounting
hole dia. 30.5

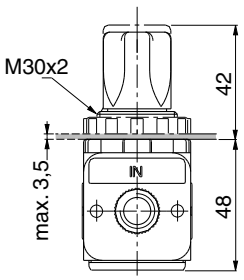

① Mounting with top bracket (accessory) and mounting ring

② Mounting with 2 side brackets (accessory)

③ 40 mm dia. pressure gauge

00263GB-2005/R01
Availability, design and specifications are subject to change without notice. All rights reserved.