Brand of NTN corporation

Technical data

UKP217H

Bearing units



Grey cast housing, radial insert ball bearing with adapter sleeve,seal with slinger

KIT CONTENT

UK217G2H, P217

VISUAL (S)

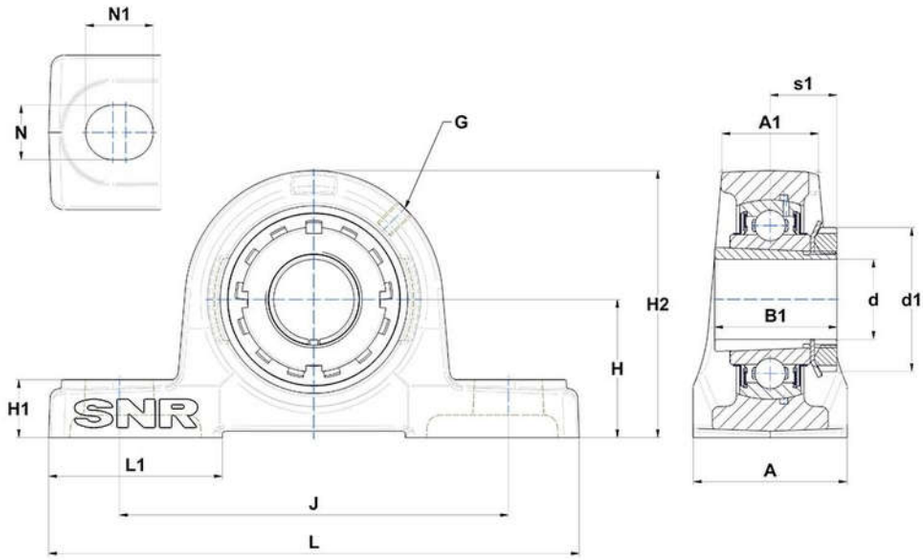

PRODUCT DEFINITION

Brand	SNR
A - Housing width	83 mm
A1 - Housing top width	53 mm
B - Width of Inner Ring	44 mm
d - Shaft diameter	75 mm
d1 - Outer dia of eccent. Lock. collar / nut of adapter sleeve	110 mm

PRODUCT DEFINITION	
G - Grease fitting	M10x1
H - Distance mounting base to centerline spheric. seating diam.	95,2 mm
H1 - Housing foot height	32 mm
H2 - Housing height	187 mm
J - Mounting holes distance	247 mm
L - Housing length	310 mm
L1 - Housing foot length	96 mm
N - Mounting hole dimension	25 mm
N1 - Mounting hole length	31 mm
s1 - Distance nut to middle of bearing raceway	40 mm

PRODUCT PERFORMANCE	
C - Dynamic load rating	83200000 mN
C0 - Static load rating	63800000 mN
Operating temperature min.	253,15 °K
Operating temperature max.	373,15 °K

OTHER FEATURES	
Mass	11,33 kg
Adapter sleeve designation	H2317