DATASHEET - EASY-E4-DC-16TE1



I/O expansion, For use with easyE4, 24 V DC, Inputs/Outputs expansion (number) digital: 8, screw terminal

Powering Business Worldwide

Part no.	**EASY-E4-DC-16TE1**
Catalog No.	**197220**
EL-Nummer (Norway)	**4500553**

Delivery program

Product range			Control relays easyE4
Subrange			easyE4 digital input/output enhancements
Basic function			easyE4 extensions
Description			Input/output extension for easyE4 control relay Expandable with the easyE4 series of digital input/output expansions with easy-E4-CONNECT1 connector (Item Y7-197225) Rated operating voltage 24V DC Digital inputs: 8 Digital outputs: 8 transistor Screw terminals
Inputs			
Inputs expansion (number)			digital: 8
Outputs			
Transistor			8
Additional features			
Display			mit Diagnose-LED
Software			EASYSOFT-SWLIC/easySoft 7
Supply voltage			24 V DC
For use with			easyE4

Technical data

General

Standards			EN 61000-6-2 EN 61000-6-3 IEC 60068-2-6 IEC 60068-2-27 IEC 60068-2-30 IEC 61131-2 EN 61010 EN 50178
Dimensions (W x H x D)		mm	71.5 x 90 x 58
Weight		kg	0.2
Mounting			Top-hat rail IEC/EN 60715, 35 mm or screw fixing using fixing brackets ZB4-101-GF1 (accessories)
Connection type			Screw terminal

Terminal capacities

Screw terminals			
Solid		mm^2	0.2/4 (AWG 22 - 12)
Flexible with ferrule		mm^2	0.2 - 2.5
Standard screwdriver		mm	3.5 x 0.8
Max. tightening torque		Nm	0.6

Climatic environmental conditions

Operating ambient temperature		°C	-25 to 55, cold as per IEC 60068-2-1, heat as per IEC 60068-2-2
Condensation			Take appropriate measures to prevent condensation
Storage	ϑ	°C	-40 - +70
relative humidity		%	in accordance with IEC 60068-2-30, IEC 60068-2-78 5 - 95
Air pressure (operation)		hPa	795 - 1080

Ambient conditions, mechanical

Protection type (IEC/EN 60529, EN50178, VBG 4)			IP20
Vibrations		Hz	In accordance with IEC 60068-2-6 constant amplitude 0.15 mm: 10 - 57

			constant acceleration 2 g: 57 - 150
Mechanical shock resistance (IEC/EN 60068-2-27) semi-sinusoidal 15 g/11 ms		Impacts	18
Drop to IEC/EN 60068-2-31	Drop height	mm	50
Free fall, packaged (IEC/EN 60068-2-32)		m	0.3
Mounting position			Vertical or horizontal

Electromagnetic compatibility (EMC)

Overvoltage category/pollution degree			III/2
Electrostatic discharge (ESD)			
applied standard			according to IEC EN 61000-4-2
Air discharge		kV	8
Contact discharge		kV	6
Electromagnetic fields (RFI) to IEC EN 61000-4-3		V/m	0.8 - 1.0 GHz: 10 1.4 - 2 GHz: 3 2.0 - 2.7 GHz: 1
Radio interference suppression			EN 61000-6-3 Class B
Burst		kV	according to IEC/EN 61000-4-4 Supply cables: 2 Signal cables: 2
power pulses (Surge)			according to IEC/EN 61000-4-5 0.5 kV (supply cables, symmetrical) 1 kV (supply cables, asymmetrical)
Immunity to line-conducted interference to (IEC/EN 61000-4-6)		V	10

Insulation resistance

Clearance in air and creepage distances			nach EN 50178, EN 61010-2-201, UL61010-2-201, CSA-C22.2 NO. 61010-2-201
Insulation resistance			in accordance with EN 50178, EN 61010-2-201, UL61010-2-201, CSA-C22.2 NO. 61010-2-201

Power supply

Rated operational voltage	U_e	V	24 DC (-15/+20%)
Permissible range	U_e		20.4 - 28.8 V DC
Residual ripple		%	≦ 5
Siemens MPI, (optional)			yes
Input current			max. 40 mA at Ue
Voltage dips		ms	≤ 10
Fuse		A	≧ 5A (T)
Heat dissipation at 24 V DC		W	1

Digital inputs 24 V DC

Number			8
Potential isolation			from power supply: no between inputs: no from the outputs: no to expansion devices: yes to base unit: yes
Rated operational voltage	U_e	V DC	24
Input voltage		V DC	Signal 0: ≦ 5 (I1 - I8) Condition 1: ≧ 15 (I1 - I8)
Input current at signal 1		mA	3.3 (I5 - I8)
Deceleration time		ms	type 0.1 (0 -> 1) type 0.2 (1 -> 0)
Cable length		m	100 (unshielded)

Transistor outputs

Number			8
Rated operational voltage	U_e	V DC	24
Permissible range	U_e		20.4 - 28.8 V DC
Residual ripple		%	5
Siemens MPI, (optional)			Yes (Caution: A short circuit will occur if a supply voltage of the wrong polarity is applied to the outputs.)
Potential isolation			from power supply: no between the inputs: no to the outputs: no to base unit: yes to expansion devices: yes
Rated operational current at signal „1" DC per channel	I_e	A	Max. 0.5
Residual current on 0 signal per channel		mA	< 0.005
Max. output voltage		V	1 (at status 0 per channel)

			$U = U_e$ - 1 V (signal 1 at I_e = 0.5 A)
Short-circuit protection			yes, electronic (Q1 - Q4, Q5 - Q8)
Short-circuit tripping current for $R_a \leqq 10$ mΩ		A	$0.7 \leqq I_e \leqq 1.7$ per output depending on number of active channels and their load
Total short-circuit current		A	13.6
Thermal cutout			Yes
Max. operating frequency with constant resistive load		Operations/h	Abhängig von der Zykluszeit des Basisgeräts und bei Erweiterungsgeräten auch von deren Übertragungszeit
Parallel connection of outputs			
With resistive load, inductive load with external suppressor circuit, combination within a group			Group 1 Q1 to Q4 Group 2 Q5 to Q8
Number of outputs	max.		8
Max. total current		A	4
Inductive load to EN 60947-5-1			
Without external suppressor circuit			
DC-13, $T_{0.95 = 72 ms, R = 48 Ω, L = 1.15 H}$			
Utilization factor		g	0.25
Duty factor		% DF	100
$T_{0.95 = 15 ms, R = 48 Ω, L = 0.24 H}$			
Utilization factor		g	0.25
Duty factor		% DF	100
With external suppressor circuit			
Utilization factor		g	1
Duty factor		% DF	100
Max. switching frequency, max. duty factor		Operations/s	Depending on the suppressor circuit

Design verification as per IEC/EN 61439

Technical data for design verification			
Static heat dissipation, non-current-dependent	P_{vs}	W	1
Operating ambient temperature min.		°C	-25
Operating ambient temperature max.		°C	55
IEC/EN 61439 design verification			
10.2 Strength of materials and parts			
10.2.2 Corrosion resistance			Meets the product standard's requirements.
10.2.3.1 Verification of thermal stability of enclosures			Meets the product standard's requirements.
10.2.3.2 Verification of resistance of insulating materials to normal heat			Meets the product standard's requirements.
10.2.3.3 Verification of resistance of insulating materials to abnormal heat and fire due to internal electric effects			Meets the product standard's requirements.
10.2.4 Resistance to ultra-violet (UV) radiation			Meets the product standard's requirements.
10.2.5 Lifting			Does not apply, since the entire switchgear needs to be evaluated.
10.2.6 Mechanical impact			Does not apply, since the entire switchgear needs to be evaluated.
10.2.7 Inscriptions			Meets the product standard's requirements.
10.3 Degree of protection of ASSEMBLIES			Meets the product standard's requirements.
10.4 Clearances and creepage distances			Meets the product standard's requirements.
10.5 Protection against electric shock			Does not apply, since the entire switchgear needs to be evaluated.
10.6 Incorporation of switching devices and components			Does not apply, since the entire switchgear needs to be evaluated.
10.7 Internal electrical circuits and connections			Is the panel builder's responsibility.
10.8 Connections for external conductors			Is the panel builder's responsibility.
10.9 Insulation properties			
10.9.2 Power-frequency electric strength			Is the panel builder's responsibility.
10.9.3 Impulse withstand voltage			Is the panel builder's responsibility.
10.9.4 Testing of enclosures made of insulating material			Is the panel builder's responsibility.
10.10 Temperature rise			The panel builder is responsible for the temperature rise calculation. Eaton will provide heat dissipation data for the devices.
10.11 Short-circuit rating			Is the panel builder's responsibility.
10.12 Electromagnetic compatibility			Is the panel builder's responsibility.

10.13 Mechanical function			The device meets the requirements, provided the information in the instruction leaflet (IL) is observed.

Technical data ETIM 7.0

PLC's (EG000024) / Logic module (EC001417)

Electric engineering, automation, process control engineering / Control / Programmable logic control (SPS) / Logic module (ecl@ss10.0.1-27-24-22-16 [AKE539014])

Supply voltage AC 50 Hz		V	0 - 0
Supply voltage AC 60 Hz		V	0 - 0
Supply voltage DC		V	20.4 - 28.8
Voltage type of supply voltage			DC
Voltage type of supply voltage			DC
Switching current		A	0.5
Number of analogue inputs			0
Number of analogue outputs			0
Number of digital inputs			8
Number of digital outputs			8
With relay output			No
Number of HW-interfaces industrial Ethernet			0
Number of interfaces PROFINET			0
Number of HW-interfaces RS-232			0
Number of HW-interfaces RS-422			0
Number of HW-interfaces RS-485			0
Number of HW-interfaces serial TTY			0
Number of HW-interfaces USB			0
Number of HW-interfaces parallel			0
Number of HW-interfaces Wireless			0
Number of HW-interfaces other			2
With optical interface			No
Supporting protocol for TCP/IP			No
Supporting protocol for PROFIBUS			No
Supporting protocol for CAN			No
Supporting protocol for INTERBUS			No
Supporting protocol for ASI			No
Supporting protocol for KNX			No
Supporting protocol for MODBUS			No
Supporting protocol for Data-Highway			No
Supporting protocol for DeviceNet			No
Supporting protocol for SUCONET			No
Supporting protocol for LON			No
Supporting protocol for PROFINET IO			No
Supporting protocol for PROFINET CBA			No
Supporting protocol for SERCOS			No
Supporting protocol for Foundation Fieldbus			No
Supporting protocol for EtherNet/IP			No
Supporting protocol for AS-Interface Safety at Work			No
Supporting protocol for DeviceNet Safety			No
Supporting protocol for INTERBUS-Safety			No
Supporting protocol for PROFIsafe			No
Supporting protocol for SafetyBUS p			No
Supporting protocol for other bus systems			No
Radio standard Bluetooth			No
Radio standard WLAN 802.11			No
Radio standard GPRS			No
Radio standard GSM			No
Radio standard UMTS			No
IO link master			No

Redundancy		No
With display		No
Degree of protection (IP)		IP20
Basic device		No
Expandable		Yes
Expansion device		Yes
With timer		No
Rail mounting possible		Yes
Wall mounting/direct mounting		Yes
Front build in possible		Yes
Rack-assembly possible		No
Suitable for safety functions		No
Category according to EN 954-1		-
SIL according to IEC 61508		None
Performance level acc. EN ISO 13849-1		None
Appendant operation agent (Ex ia)		No
Appendant operation agent (Ex ib)		No
Explosion safety category for gas		None
Explosion safety category for dust		None
Width	mm	71.5
Height	mm	90
Depth	mm	58

Approvals

Degree of Protection		IEC: IP20, UL/CSA Type: -

Dimensions

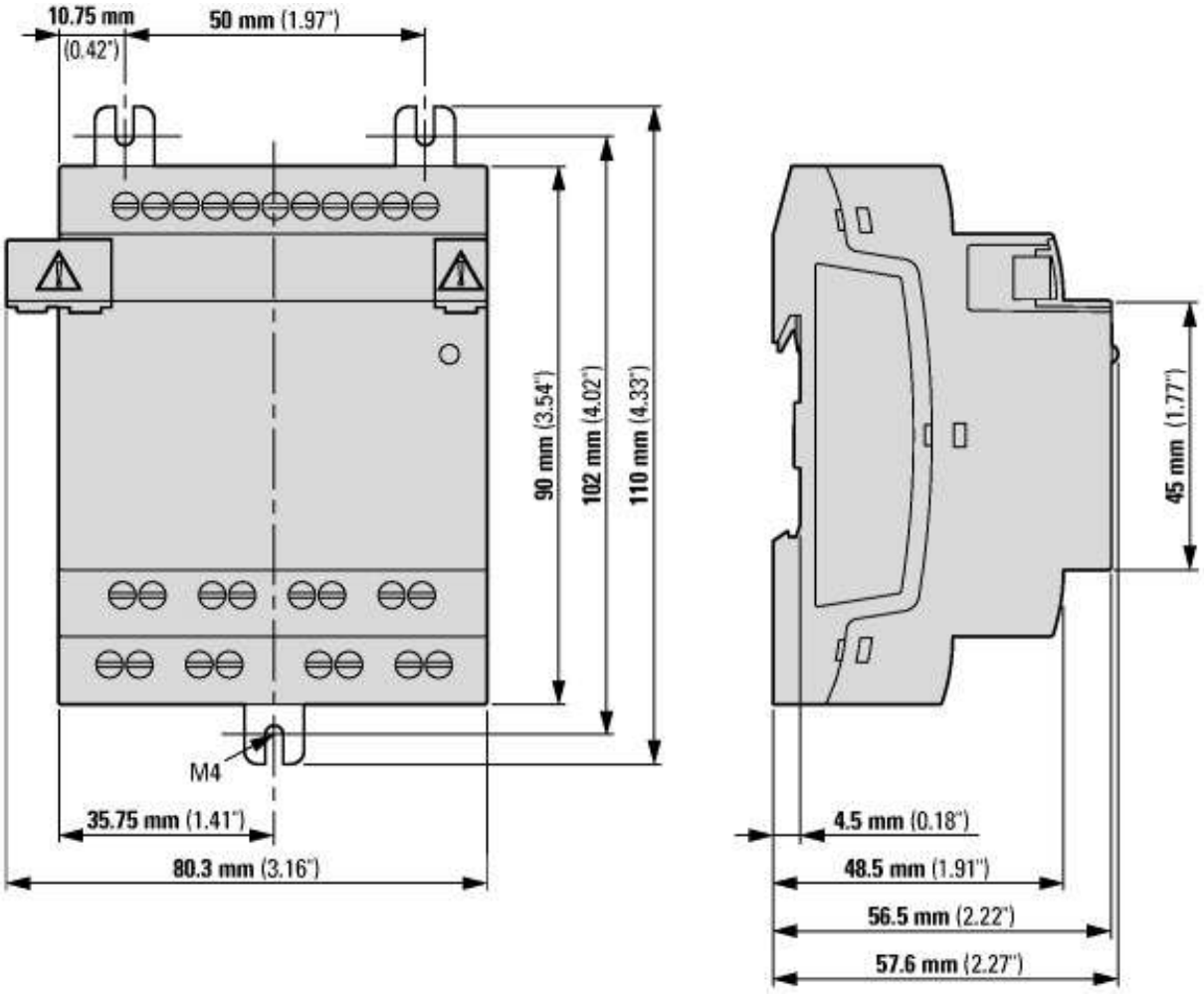

Assets (links)

Declaration of CE Conformity

00003206

© 05/2019 by Eaton Industries GmbH