SCHAEFFLER

Deep groove ball bearings 6312-C-2HRS (Series 63..-C-2HRS)

modified internal construction (Generation C), main dimensions to DIN 625-1, lip seals on both sides

The datasheet is only an overview of dimensions and basic load ratings of the selected product. Please always observe all the guidelines in these overview pages. Further information is given on many products under the menu item "Description". You can also order comprehensive information via the Catalogue selection system (https://www.schaeffler.de/content.schaeffler.de/en/news_media/index.jsp) or by telephone on +49 (91 32) 82 - 28 97.

d	60	mm	
D	130	mm	
B	31	mm	
D_2	112,1	mm	
d_2	79,6	mm	
$D_{a\ max}$	118	mm	
$d_{a\ min}$	72	mm	
$r_{a\ max}$	2,1	mm	
r_{min}	2,1	mm	
m	1,75	kg	Mass

C_r	89000 N	Basic dynamic load rating, radial
C_{0r}	52000 N	Basic static load rating, radial
C_{ur}	3600 N	Fatigue limit load, radial
n_G	4800 1/min	Limiting speed
f_0	13,2	Calculation factor

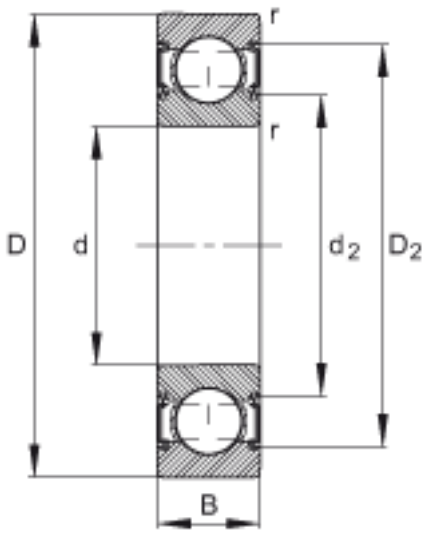

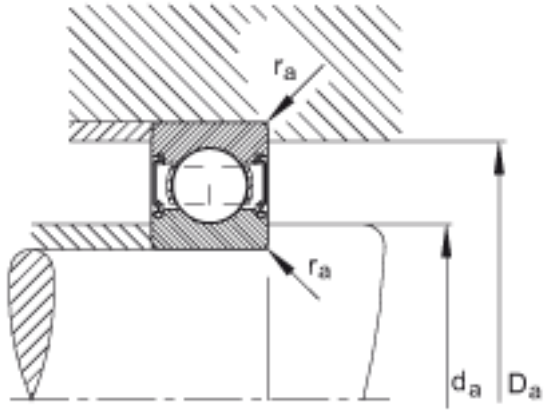

Mounting dimensions