THE INFORMATION CONTAINED IN THIS DRAWING IS THE SOLE PROPERTY OF L-COM, INC. ANY REPRODUCTION IN PART OR WHOLE WITHOUT THE WRITTEN PERMISSION OF L-COM, INC. IS PROHIBITED.

RoHS Compliant ✔

REVISIONS			
REV	DESCRIPTION	DATE	APPROVED
F	ECN 4353: ADDED ROHS STAMP, ADDED METRIC DIMENSIONS	11/4/09	D.FRISIELLO
G	ECN 6492: CHANGED NOTE TO "TDG1026KS-C6" WITHOUT PKG. UPD LOGO	10/29/12	D. DESJARDIN

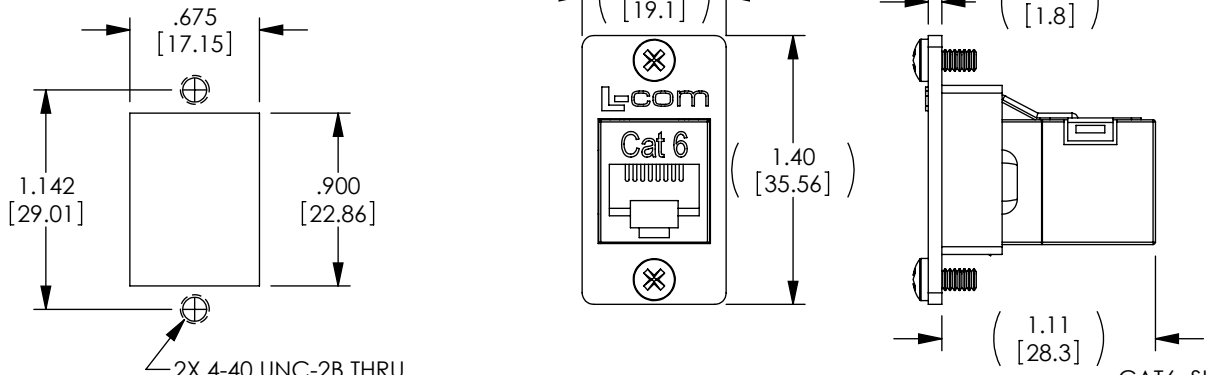

RECOMMENDED PANEL OPENING

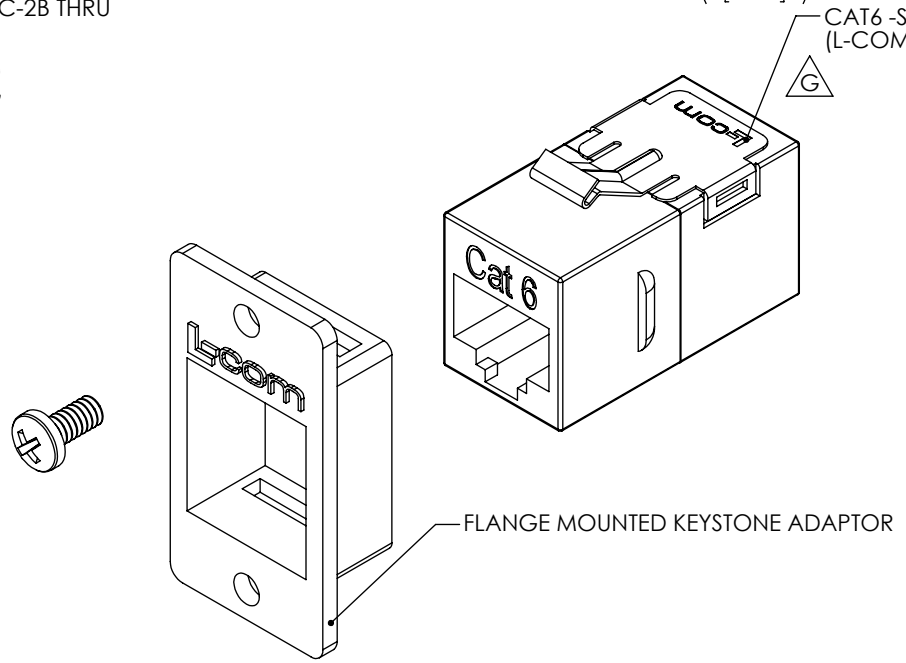

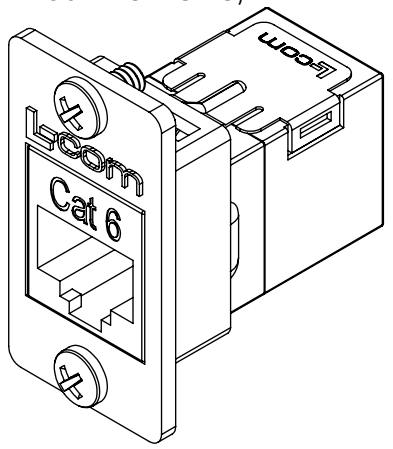

KIT SHOWN FULLY ASSEMBLED FOR CLARITY
(KIT IS SHIPPED UN-ASSEMBLED)

KIT INCLUDES:
1- SHIELDED COUPLER
1- FLANGE ADAPTOR
1- PACKAGE MOUNTING SCREWS (4-40x 1/4")

NOTE:

MATERIAL
FLANGED ADAPTOR: ZINC ALLOY
HARDWARE: STAINLESS STEEL

FINISH
FLANGED ADAPTOR: NICKEL PLATE

VOLTAGE RATING: 36V

KIT SHALL BE INDIVIDUALLY PACKAGED IN ACCORDANCE WITH L-COM SPECIFICATION PS-0031.

UNLESS OTHERWISE SPECIFIED,
DIMENSIONS ARE IN INCHES [mm]
OVERALL CABLE LENGTH TOLERANCE:
≤12 [305] = +1 [25] / -0
>12 [305] ≤60 [1524] = +2 [51] / -0
>60 [1524] ≤120 [3048] = +4 [102] / -0
>120 [3048] ≤300 [7620] = +6 [152] / -0
>300 [7620] = +5% / -0%
ALL OTHER DIMENSIONAL TOLERANCES:
.X = ± .2
.XX = ± .05
.XXX = ±.005
PROJECTION

APPROVALS	DATE
DRAWN BY B.MAZEJKA	07/01/2003
CHECKED BY D.PARHAM	07/02/2003
APPROVED BY R.CARRICK	07/03/2003

CONFIGURATION DETAILS OF UNDIMENSIONED FEATURES MAY VARY

COLOR VARIATIONS MAY OCCUR

L-COM Global Connectivity
45 BEECHWOOD DRIVE
NORTH ANDOVER, MA
01845

CATEGORY
TELECOM/MODULAR

PRODUCT DESCRIPTION
CAT 6 SHLD RJ45 PNL CPLR KIT

SIZE	FSCM NO.	DWG. NO.	REV.
A	43321	ECF504-SC6	G

SCALE: NONE | CAD FILE: ECF504-SC6.SLDDRW | SHEET 1 OF 1