3/2-shut-off valve, mechanically operated, Series 651

G651A3M010A0000



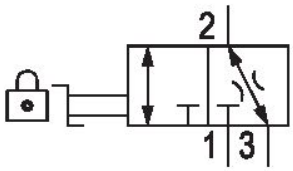

Technical data

Industry	Industrial
Activation	Mechanical
Nominal flow Qn	1440 l/min
Compressed air connection	G 1/8
Working pressure min.	0 bar
Working pressure max	16 bar
Certificates	ATEX optional
Parts	Shut-off valve
Lock type	for padlocks
Connection type	Pipe connection
Min. ambient temperature	-10 °C
Max. ambient temperature	50 °C
Min. medium temperature	-10 °C

Max. medium temperature	50 °C
Medium	Compressed air Neutral gases
Compressed air connection standard	according to ISO 228-1
Nominal flow Qn 1 to 2	1440 l/min
Nominal flow Qn 2 to 3	250 l/min
Weight	0.26 kg
Housing material	Aluminum
Seal material	Nitrile butadiene rubber
Part No.	G651A3M010A0000

Technical information

The min. control pressure must be adhered to, since otherwise faulty switching and valve failure may result!

The pressure dew point must be at least 15 °C less than ambient and medium temperature and may not exceed 3 °C.

The oil content of compressed air must remain constant during the life cycle.

Use only the approved oils from AVENTICS. Further information can be found in the “Technical information” document (available in https://www.emerson.com/en-us/support).

Dimensions

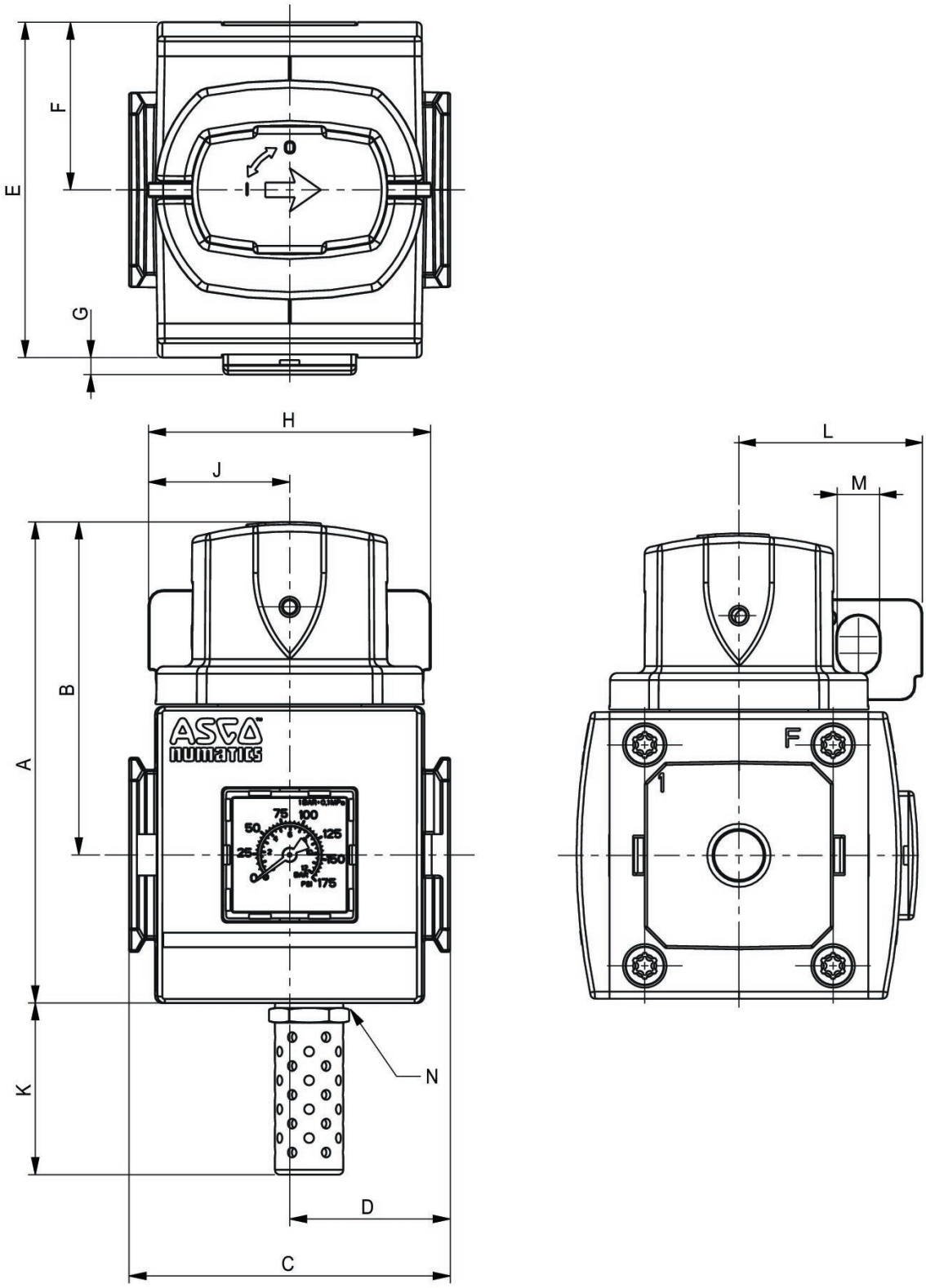

Series	651
A	90,5
B	65,5
C	50
D	25
E	58
F	29
G	4,4
H	57,8
J	28,9
K	35,5
L	38
M	9
N	G 1/4

Accessories overview

