

Model Number

NBN8-F1-E2

Features

- **8 mm non-flush**
- **3-wire DC**

Connection

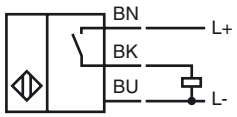

Dimensions

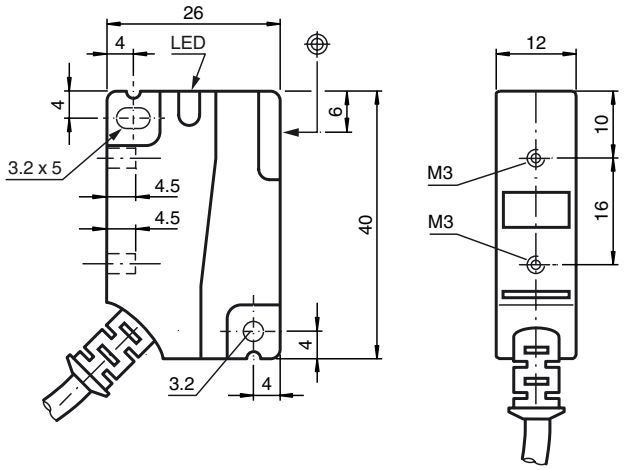

Technical Data

General specifications		
Switching element function		PNP NO
Rated operating distance	s_n	8 mm
Installation		non-flush
Output polarity		DC
Assured operating distance	s_a	0 ... 6.48 mm
Reduction factor r_{Al}		0.45
Reduction factor r_{Cu}		0.45
Reduction factor r_{304}		0.7
Reduction factor r_{Brass}		0.55
Nominal ratings		
Operating voltage	U_B	10 ... 30 V DC
Switching frequency	f	0 ... 1400 Hz
Hysteresis	H	typ. 5%
Reverse polarity protected		reverse polarity protected
Short-circuit protection		pulsing
Voltage drop	U_d	≤ 2.5 V
Rated insulation voltage	U_{BIS}	60 V
Operating current	I_L	0 ... 250 mA
Off-state current	I_r	0 ... 0.01 mA typ. 0.1 µA at 25 °C
No-load supply current	I_0	≤ 15 mA
Indication of the switching state		LED, yellow
Functional safety related parameters		
$MTTF_d$		1640 a
Mission Time (T_M)		20 a
Diagnostic Coverage (DC)		0 %
Ambient conditions		
Ambient temperature		-25 ... 70 °C (-13 ... 158 °F)
Mechanical specifications		
Connection type		cable PVC , 2 m
Core cross-section		0.5 mm^2
Housing material		PA
Sensing face		PA
Protection degree		IP67
Tightening torque, fastening screws		Threading M3 max: 1.1 Nm
Compliance with standards and directives		
Standard conformity		
Standards		EN 60947-5-2:2007 IEC 60947-5-2:2007
Approvals and certificates		
Protection class		II
Rated insulation voltage	U_i	60 V
Design-impulse-voltage withstand	U_{imp}	800 V
UL approval		cULus Listed, General Purpose
CSA approval		cCSAus Listed, General Purpose
CCC approval		Products with a maximum operating voltage of ≤36 V do not bear a CCC marking because they do not require approval.

Release date: 2012-06-04 10:30 Date of issue: 2012-06-04 184376_eng.xml