87045 LIMOGES Cedex
Telephone : 05 55 06 87 87 – Fax: 05 55 06 88 88

Temperature measurement module from Pt100 sensors, for 4 120 53

Cat. N°: 4 120 58



Contents **Pages**

1. Description - Use.....1
2. Range.....1
3. Overall dimensions.....1
4. Preparation - Connection.....1
5. General characteristics.....2
6. Compliance and approvals.....3

1. DESCRIPTION - USE

Temperature measurement module.
Allows temperature measurement by external Pt100 sensors.
The module is equipped with 2 independent measurement channels.

2. RANGE

. Cat. N° 4 120 58: Temperature measurement module from external Pt100 sensors; associable only to multifunction measuring device 4 120 53.
. It is possible to connect only one module 4 120 58.

Auxiliary supply:
. Supplied by the multifunction measuring device 4 120 53

3. OVERALL DIMENSIONS

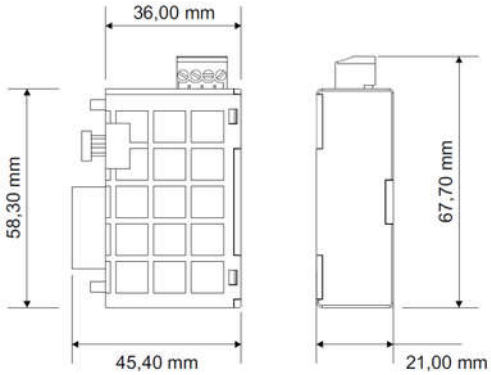

4. FIXING - CONNECTION

Fixing:

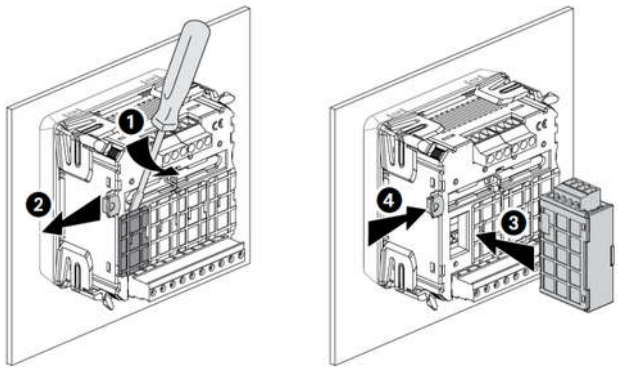

Note: modules must be connected with the device 4 120 53 not supplied.

Associability table:

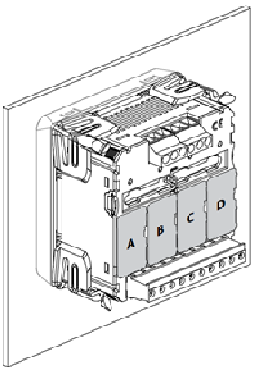

	A	B	C	D	
4 120 55	✓	×	×	×	max. 1
4 120 56	✓	×	×	×	max. 1
4 120 57	×	×	✓	✓	max. 2
4 120 58	×	×	×	✓	max. 1
4 120 59	✓	✓	✓	✓	max. 2
4 120 60	×	×	✓	✓	max. 2
4 120 61	×	✓	×	×	max. 1

Operating position:

. Vertical Horizontal Upside down On the side

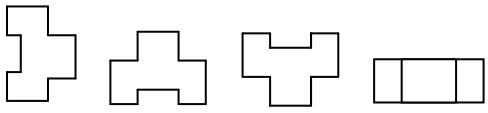

Temperature measurement module from Pt100 sensors, for 4 120 53

Cat. N°: 4 120 58

4. FIXING - CONNECTION *(continued)*

Screw terminals:
. Terminal depth: 8 mm.
. Stripping length: 8 mm

Screw head:
. Screw slotted.

Recommended tightening torque:
. 0,6 Nm.

Tools required:
. For terminals: flat screwdriver 2,5 mm
. For fixing the modules to the measuring device: flat screwdriver max. 5 mm.

Connectable section:
. Copper cables.

	Without ferrule	With ferrule
Rigid cable	**0,05 to 2,5 mm²**	-
Flexible cable	**0,05 to 1,5 mm²**	**0,05 to 1,5 mm²**

Wiring diagrams:
. Terminals identifications

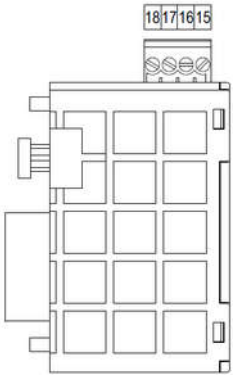

Wiring diagram Pt100 temperature sensors
. Sensor 2-wires

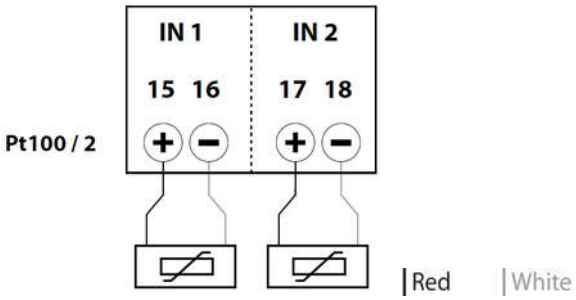

4. FIXING - CONNECTION *(continued)*

Wiring diagram Pt100 temperature sensors *(continued)*
. Sensor 3-wires

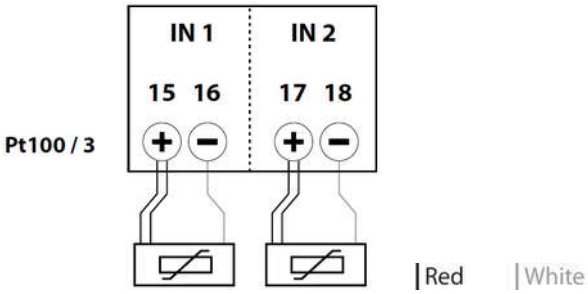

. Sensor 4-wires

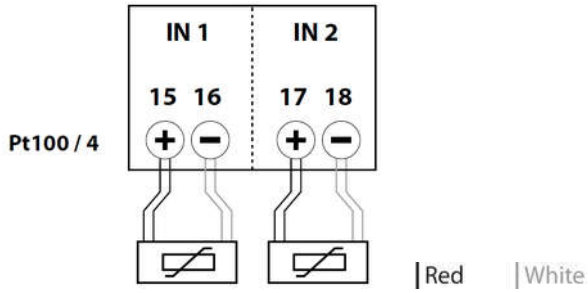

Note: metallic part of the sensor must be earthed.

5. GENERAL CHARACTERISTICS

Terminals marking:
. By permanent ink pad printing.

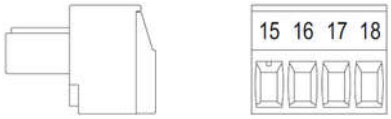

Characteristics of the measuring inputs:
. 2 inputs (not isolated from each other)
. Sensor type: Pt100 resistor probe of platinum
. Measuring range: (- 50 °C) ÷ (+ 350 °C)
. Sensors cable max. length: 3 m
. Line resistance: ≤ 1 °C (with 1,5mm² cable and length10m)
. Measuring current (applied to Pt100): ≤ 500µA
. Linearization Pt100: according to IEC/EN 60751
. Precision: cl. 0,5
. Readings update:
1 s, for variations ≥ 10 °C
10 s, for variations < 10 °C

Measurement display:
. Resolution: 1 °C
. Out of scale indication:
"high": T > (+ 350 °C)
"low": T < (- 50 °C)
. Display of measuring circuit interruption: the display shows the text "high".

5. GENERAL CHARACTERISTICS *(continued)*

Plastic material:
. Self-extinguishing polycarbonate.

Ambient operating temperature:
. Min. = - 5 °C Max. = + 55 °C.

Ambient storage temperature:
. Min. = - 25 °C Max. = + 70 °C.

Impulse withstand voltage:
. Measuring inputs / All circuits
alternate current 50 Hz / 1 min.: 2 kV

Note: values referred to combination measuring device + add-on module.

Average weight per device:
. 0,040 kg.

Volume when packed:
. 0,30 dm^3.

Consumption:
. Module 4 120 58: ≤ 1 VA
. Measuring device 4 120 53 + 1 Module 4 120 58: ≤ 5 VA

6. COMPLIANCE AND APPROVALS

Compliance to standards:
. Compliance with Directive on electromagnetic compatibility (EMC) n° 2004/108/EC
. Compliance with low voltage directive no. 73/23/CEE dated 19 February 1973, modified by directive no. 93/68/CEE dated 22 July 1993, modified by directive n° 2006/95/CE.
. IEC/EN 60751