Pomona ELECTRONICS

Technical Data Sheet

Model 6087
Field Service Kit, Red, ESD

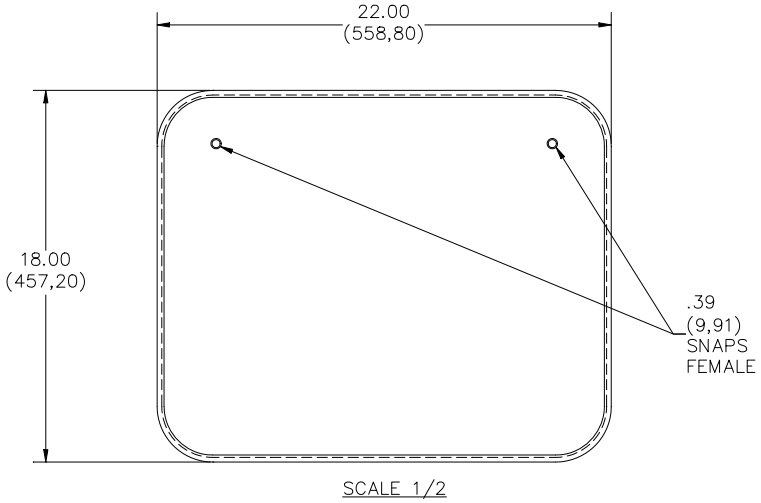

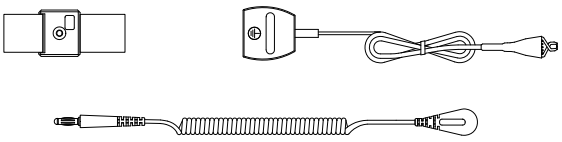



Features

- Complete and durable service kit for static sensitive work.
- Features a static-safe 18” x 22” (460mm x 560mm) laminated red vinyl mat.
- Kit includes a mat with two 10mm snap sockets, common point ground connector with two Banana Plug Jacks and a 15’ ground lead, an adjustable elastic wrist strap (Model 6081) and a resistive coil cord (Model 5534).
- Folds down to fit into your tool box.

USA: Sales: 800-490-2361
Technical Support: technicalsupport@pomonatest.com
Fax: 425-446-5844
Europe: 31-(0) 40 2675 150 **International:** 425-446-5500
Where to Buy: www.pomonaelectronics.com

All dimensions are in inches. Tolerances (except noted): .xx = ±.02” (,51 mm), .xxx = ± .005” (,127 mm). All specifications are to the latest revisions. Specifications are subject to change without notice. Registered trademarks are the property of their respective companies.

Copyright © 2010

Model 6087
Field Service Kit, Red, ESD

Specifications

Wrist Strap:
- Body: Impact resistant plastic, Blue
- Strap: Elastic fibers with silver-plated Nylon, Yarn, Circumference: 2.50” (64,0) min., 13.00” (330,0) max.
- Snap and Cam: Stainless Steel, 4mm (0.16”) snap stud

Anti-Static Ground Cord:
- Banana Plug:
  - Body – Brass, nickel-plated, fits 4.2mm (0.17”) standard Banana Jack
  - Insulation – PVC, Black
- Cord: Coiled Tinsel Cord, Polyurethane 2.25mm O.D.
- Snap:
  - Body – Brass, nickel-plated, fits 4mm (0.16”) snap stud
  - Insulation – PVC, Black
- Length: 6 feet, extended
- Resistor: 1 megohm

MAT, ESD: 0.018” (0,46) thick, vinyl, Red

Common Point Ground Cord:
- Snap with Banana Jacks End:
  - Body – Brass, nickel-plated, 10mm (3/8”) Stud (Male)
  - Resistor – 1 Megohm, insulated
  - Insulation – PVC, Black
  - Banana Jacks – Brass, nickel-plated, fits 4.2mm (0.17”) Standard Banana Plug
- Cord: Coiled Tinsel Cord, Polyurethane 2.25mm O.D., Length: 15 ft.
- Large Alligator Clip End:
  - Body – Brass, nickel-plated, fits 4.2mm (0.17”) Standard Banana Plug
  - Insulation – PVC, Black

Ratings

Surface Resistivity:	108 to 109 Ohm/Sq.
Volume Resistivity:	109 Ohm cm
Static Decay:	0.01 sec 5000V to 0V 12% RH

Ordering Information

Model: 6087
Packaging: Elastic Wrist Strap, Anti-Static Ground Cord, Common Point Ground Cord, Mat, Alligator Clip, and two Instruction Sheets per bag.

USA: Sales: 800-490-2361
Technical Support: technicalsupport@pomonatest.com
Fax: 425-446-5844
Europe: 31-(0) 40 2675 150 **International:** 425-446-5500
Where to Buy: www.pomonaelectronics.com

All dimensions are in inches. Tolerances (except noted): .xx = ±.02” (,51 mm), .xxx = ± .005” (,127 mm). All specifications are to the latest revisions. Specifications are subject to change without notice. Registered trademarks are the property of their respective companies.

Copyright © 2010 D1094537 Rev. 100