Brand of NTN corporation

Technical data

10X22210EAW33EEL

Spherical roller bearings



ULTAGE

VISUAL (S)

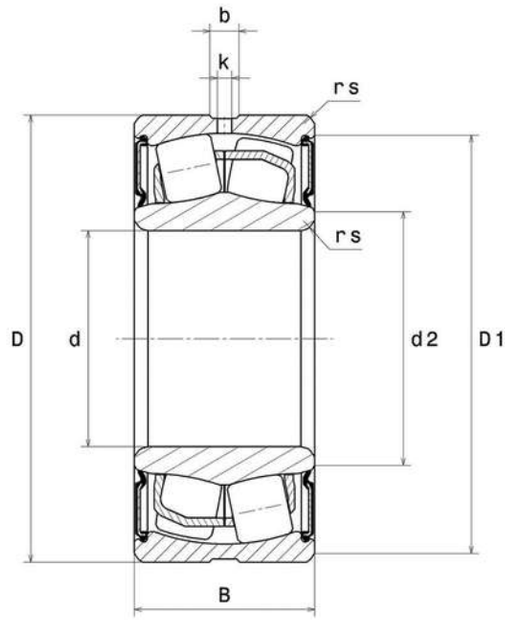

10X22210EAW33EEL
Spherical roller bearings

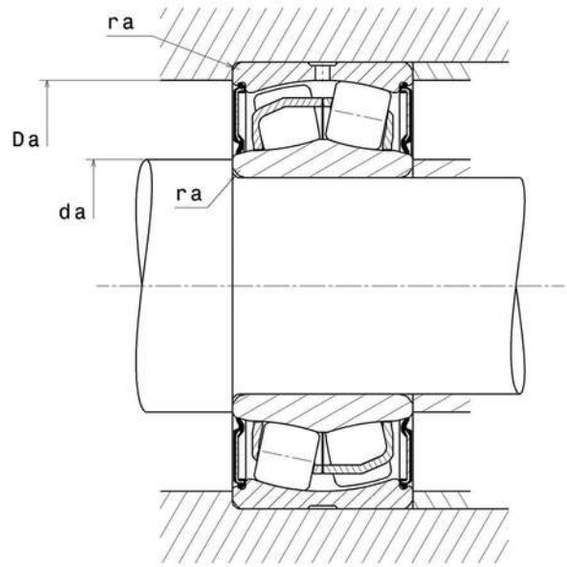

PRODUCT DEFINITION

Brand	SNR
d - Internal diameter	50 mm
D - External diameter	90 mm
B - Bearing/Inner ring width	28 mm
d2 - External diameter inner ring	57,1 mm
D1 - Inner diameter outer ring	82,2 mm
rs - Min fillet radius	1,1 mm
Number of lubrication holes	3
b - Groove width	5,83 mm
k - Hole diameter	2,5 mm
Radial clearance class	CN
Mass	0,7 kg

PRODUCT PERFORMANCE

10X22210EAW33EEL
Spherical roller bearings

PRODUCT PERFORMANCE	
C - Dynamic load	130000000 mN
C0 - Static load	124000000 mN
Cu - Fatigue limit load	15100000 mN
e - Coefficient	0.24
Y0 - Static axial load coefficient	2.78
Y1 - Lower axial load coefficient	2.84
Y2 - Upper axial load coefficient	4.23
N lim - Mechanical Limit Speed	11400 °/s
Tmin - Min operating temperature	253,15 °K
Tmax - Max operating temperature	393,15 °K

BEARING FREQUENCIES	
BPFO - Over rolling frequency on outer ring (60 rpm)	7.631 Hz
BPFI - Over rolling frequency on inner (60 rpm)	10.369 Hz
BSF - Over rolling frequency on rolling element (60 rpm)	6.342 Hz
BRF - Rotational frequency – rolling element (60 rpm)	3.171 Hz
FTF - Rotational frequency - cage (60 rpm)	0.424 Hz

ABUTMENT	
da max - Max shoulder diameter IR	57,1 mm
da min - Min shoulder diameter IR	57 mm
db - Min diameter for Sleeve	0 mm
Da max - Max shoulder diameter OR	83 mm
ra max - Max shaft & housing fillet radius	1 mm

INDUSTRY CALCUL FACTORS

Equivalent dynamic radial load

$P = X.Fr + Y.Fa$

Fa / Fr ≤ e		Fa / Fr > e	
X	Y	X	Y
1	Y1	0.67	Y2

Equivalent static radial load

$Po = Xo.Fr + Yo.Fa$

X_0	Y_0
1	Y0

The values for e, Y1, Y2 and Y0 are shown in the above table .