MOUNT 22000

Natural frequency : 10 to 15 Hz (1)







DESCRIPTION

The 22000 mount is made of two parts of elastomer bonded to a central tube.
- Interior reinforced : cylindrical tube.
- Elastomer : chloroprene. Range of five different stiffnesses.

OPERATION

The design of the 22000 mount gives the following basic characteristics :
- elastomer element resistant to oils, supporting axial and radial loadings;
- axial to radial stiffness of 1:1;
- absorb vibration and reduce noise in all directions.

Advantages
- Good isolation against structural noises.
- Chloroprene resistant to oils.
- Simple ans economical.
- Simple to fix.
- Five size for a load capacity under axial pressure from 18 to 954 daN and under radial pressure until 443 daN
- Anti-rebound effect when it is assembled with a washer.

APPLICATION

22000 mounts can be used in static or mobiles applications, such as : pumps, compressors, generators, electronic equipement, HVAC equipement, engines with internal combustion, transmissions, plant cabs, radiators,etc.

1) the indicated natural frequency, are valid for the maxi loads of the ranges of use quoted in the paragraph : TECHNICAL CHARACTERISTICS.

DIMENSIONS CHARACTERISTICS

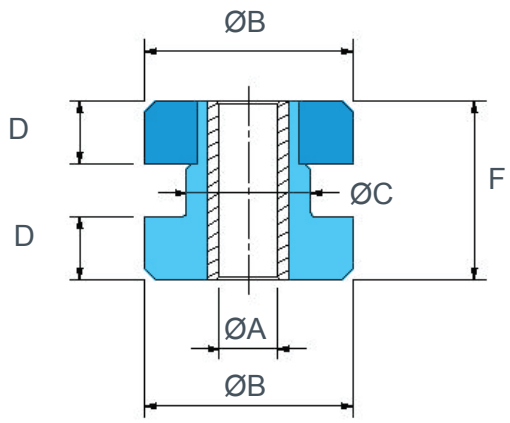

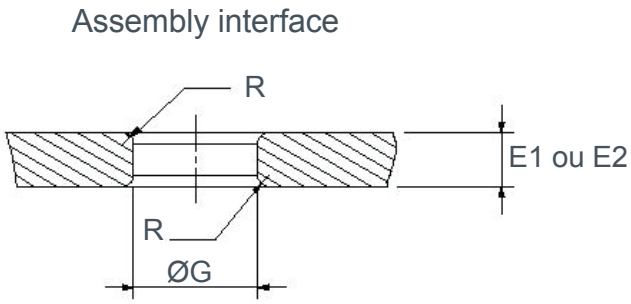

E : support structure thickness can be E_1 or E_2 depending on the required load and natural frequency (see technical chart next page).

Reference Paulstra	Barry Control Reference	Ø A (mm)	Ø B (mm)	Ø C (mm)	D (mm)	F (mm)	Mounting hole		Weight (g)
							Ø G (mm)	R (mm)	
530903 11 to 15	22001-11 to 15	10,4	33,2	20,1	12,3	31,7	19	1	43
530903 21 to 25	22002-11 to 15	13,5	47,7	33	19,8	49,2	31,7	1,5	142
530903 31 to 35	22003-11 to 15	16,7	64,8	40,1	22,8	61,7	38,1	2,3	313
530903 41 to 45	22004-11 to 15	23,8	88,9	58,4	25,4	73,1	57,1	3	670
530903 51 to 55	22005-11 to 15	27	123,9	64,8	31,7	85,8	63,5	3	1 306

ASSEMBLY

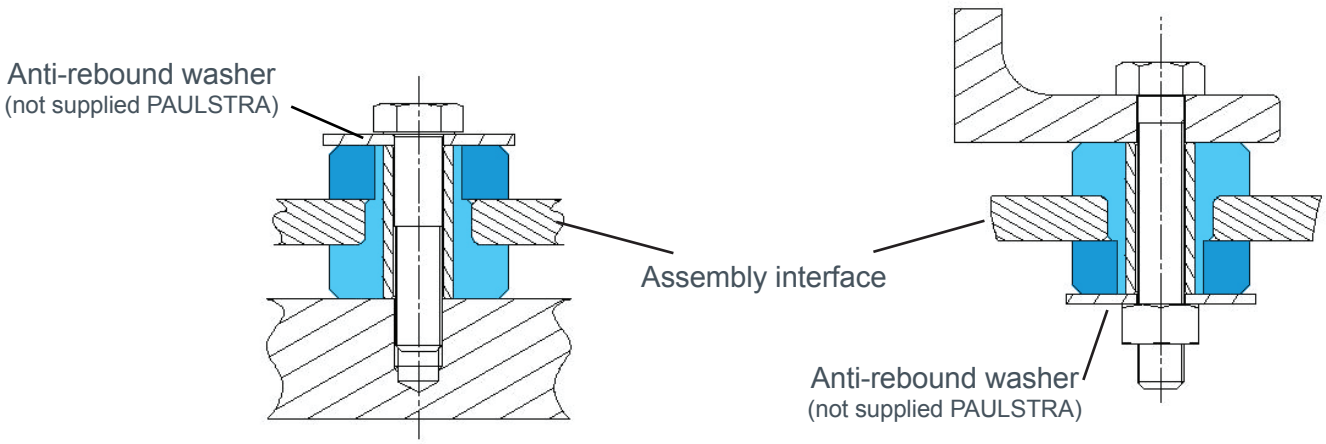

Zinc plated steel washers are recommended for the assembly of the mount.
They make it possible to carry out debouncing.
Material: S235 steel (E24) or equivalent with Rm = 340 MPa.
(not including PAULSTRA)

Reference Paulstra	Anti-rebound washer*		
	Ø a (mm)	Ø b (mm)	e (mm)
530903 11 to 15	39,6	10,3	2,2
530903 21 to 25	54,1	13,5	3,4
530903 31 to 35	71,3	16,7	4,7
530903 41 to 45	98,5	23,8	6,3

* Not supplied

OPERATING CHARACTERISTICS

The maximum loadings depend on the compression of the assembly by comparing the thicknesses E_1 and E_2.

Paulstra reference	Barry Control Reference	E_1 Support structure thickness-Load per mount				E_2 Support structure thickness-Load per mount				Colour marking
		Axial (daN)	Radial (daN)	Fo (Hz)	E_1 (mm)	Axial (daN)	Radial (daN)	Fo (Hz)	E_2 (mm)	
530903 11	**22001- 11**	18	9			18	9			Red & White
530903 12	**22001- 12**	40	13			40	13			Yellow & White
530903 13	**22001- 13**	63	18	15	9,5	63	18	15	9,5	Green & White
530903 14	**22001- 14**	113	22			113	22			Blue & White
530903 15	**22001- 15**	136	27			136	27			Purple & White
530903 21	**22002- 11**	59	22			27	18			Red & White
530903 22	**22002- 12**	79	29			54	36			Yellow & White
530903 23	**22002- 13**	109	40	12	14	72	56	15	12,5	Green & White
530903 24	**22002- 14**	172	75			118	81			Blue & White
530903 25	**22002- 15**	286	127			172	127			Purple & White
530903 31	**22003- 11**	95	40			40	31			Red & White
530903 32	**22003- 12**	159	63			68	47			Yellow & White
530903 33	**22003- 13**	222	102	11	22	102	72	15	19	Green & White
530903 34	**22003- 14**	390	175			147	111			Blue & White
530903 35	**22003- 15**	604	313			227	163			Purple & White
530903 41	**22004- 11**	122	61			68	50			Red & White
530903 42	**22004- 12**	231	104			136	100			Yellow & White
530903 43	**22004- 13**	350	156	10	28,5	181	136	15	25,5	Green & White
530903 44	**22004- 14**	531	268			227	181			Blue & White
530903 45	**22004- 15**	954	443			272	263			Purple & White
530903 51	22005- 11	518	109			136	68			Red & White
530903 52	22005- 12	877	154			227	100			Yellow & White
530903 53	22005- 13	1 172	277	10	32	318	136	15	25,5	Green & White
530903 54	22005- 14	1 609	404			409	213			Blue & White
530903 55	22005- 15	2 072	640			545	300			Purple & White

See current price list for availability of items.
* Barry Controls part numbers are shown as a reference only.

LOAD/DEFLECTION CURVES IN AXIAL COMPRESSION

Support structure thickness E_1 and E_2

