Ball eye rod end AP6, series CM2

8958208842

AVENTICS Ball eye rod ends



Technical data

Industry	Industrial
For series	with flange to mount on cylinder PRA, TRB, CCI, SSI, MNI, RPC, KPZ, 167, CVI, RDC, 102, ITS
For series	ITS
Thread size	M48x2
Swivel bearing Ø	50 mm
Weight	5.2 kg

Material

Housing material	Steel, chrome-plated
Surface housing	galvanized
Part No.	8958208842

Ball eye rod end AP6, series CM2

8958208842

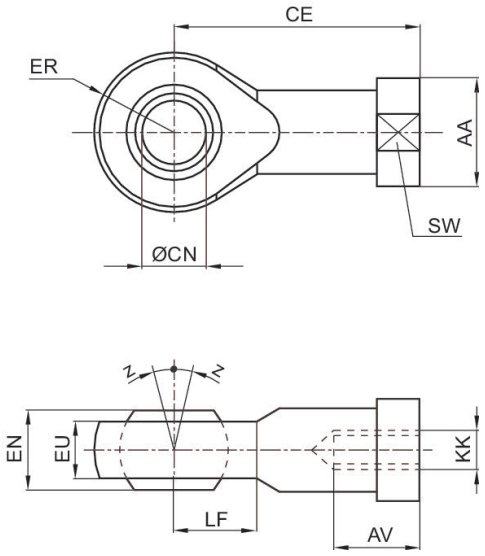

KK	Part No.	AA	AV min.	CE	Ø CN H7	EN –0,1	ER	EU max.	LF
M4	1822124000	12	8	27	5	8	9	7.5	9
M6	1822124001	13	9	30	6	9	10	7.5	10
M8	1822124002	16	12	36	8	12	12	9.5	12
M10	8958206402	19	20	43	10	14	14	10.5	13
M12	8958208852	22	22	50	12	16	16	12	16
M10x1,25	1822124003	19	15	43	10	14	14	11.5	14
M12x1,25	1822124004	22	18	50	12	16	16	12.5	16
M16x1,5	1822124005	27	24	64	16	21	21	15.5	21
M20x1,5	1822124006	34	30	77	20	25	25	18.5	25
M24x2	8958208002	42	36	94	25	31	30	23	30
M27x2	1822124013	50	45	110	30	37	35	27	35
M36x2	1822124008	60	56	125	35	43	40	32	40
M42x2	1822124009	69	60	142	40	49	45.5	37	45
M48x2	8958208842	75	65	160	50	60	58	45	60

KK	SW	Z [°] max.
M4	9	4
M6	11	4
M8	14	4
M10	17	6
M12	19	13
M10x1,25	17	4
M12x1,25	19	4
M16x1,5	22	4
M20x1,5	30	4
M24x2	36	15
M27x2	41	4
M36x2	50	4

Ball eye rod end AP6, series CM2

8958208842

KK	SW	Z [°] max.
M42x2	55	4
M48x2	65	6