IM5183

Inductive sensor with IO-Link

IMC4020BFRKG/IO/US-100

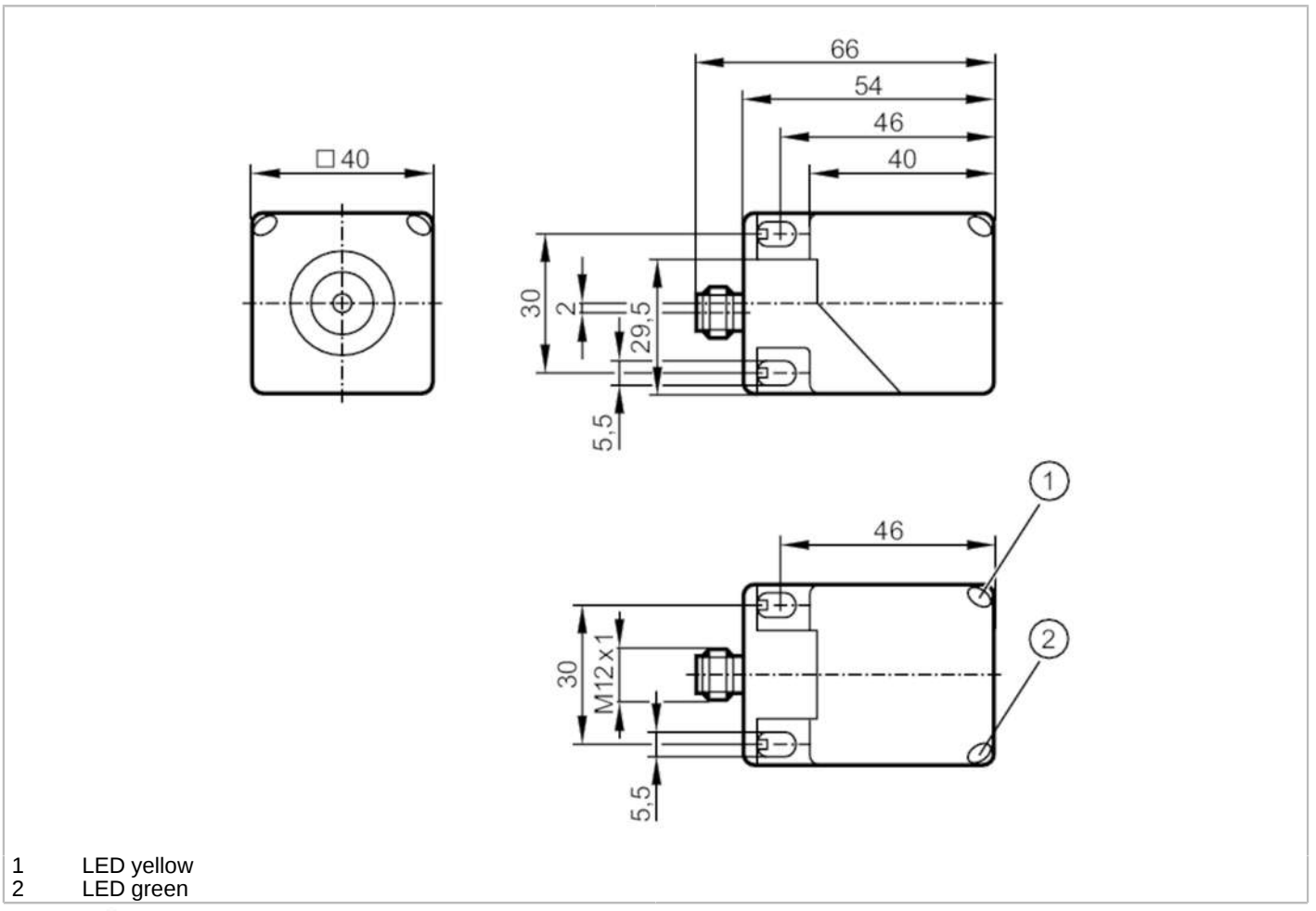

1 LED yellow
2 LED green

Product characteristics		
Electrical design		PNP/NPN; (parameterisable)
Output function		normally open / normally closed; (parameterisable)
Communication interface		IO-Link
Housing		rectangular
Dimensions	[mm]	40 x 40 x 54
Electrical data		
Operating voltage	[V]	10...30 DC
Current consumption	[mA]	< 17
Protection class		III
Reverse polarity protection		yes
Outputs		
Electrical design		PNP/NPN; (parameterisable)
Output function		normally open / normally closed; (parameterisable)
Max. voltage drop switching output DC	[V]	2.5
Permanent current rating of switching output DC	[mA]	100
Switching frequency DC	[Hz]	100

IM5183

Inductive sensor with IO-Link

IMC4020BFRKG/IO/US-100

Short-circuit protection			yes
Overload protection			yes
Detection zone			
Switch point IO-Link	[mm]		3.9...19.6; (parameterisable)
Measuring range IO-Link	[mm]		2.1...21
Accuracy / deviations			
Correction factor			steel: 1 / stainless steel: 0.8 / brass: 0.4 / aluminium: 0.4 / copper: 0.3
Hysteresis	[% of Sr]		3...15
Note on hysteresis			parameterisable
Linearity error IO-Link	[%]		± 2; (of the final value of the measuring range)
Repeatability analogue output	[%]		± 1; (of the final value of the measuring range)
Temperature coefficient	[%/K vom MEW]		± 0,3
Temperature drift			± 10 %; (of the final value of the measuring range)
Interfaces			
Communication interface			IO-Link
Transmission type			COM2 (38,4 kBaud)
IO-Link revision			1.1
SDCI standard			IEC 61131-9
Profiles			Smart Sensor: Identification and diagnosis; Multi-channel, two setpoint switching sensor, type 0 Generic Profiled Sensor; Teach Channel
SIO mode			yes
Required master port type			A
Min. process cycle time	[ms]		3.2
IO-Link process data (cyclical)		function	bit length
		process value	16
		device status	4
		binary switching information	2
IO-Link functions (acyclical)			switching cycles counter; switch-on cycle counter; operating hours counter; internal temperature; application specific tag
Supported DeviceIDs		Type of operation	DeviceID
		Default	1344
Note			For further information please see the IODD PDF file under "Downloads"
Operating conditions			
Ambient temperature	[°C]		-25...80
Protection			IP 67
Tests / approvals			
EMC		EN 61000-4-2 ESD	4 kV CD / 8 kV AD
		EN 61000-4-3 HF radiated	10 V/m
		EN 61000-4-4 Burst	2 kV
		EN 61000-4-6 HF conducted	10 V
		EN 55011	class B
Vibration resistance		EN 60068-2-6 Fc	20 g (10...3000 Hz) / 50 sweep cycles, 1 octave per minute, in 3 axes
Shock resistance		EN 60068-2-27 Ea	100 g 11 ms half-sine; 3 shocks each in every direction of the 3 coordinate axes

IM5183

Inductive sensor with IO-Link

IMC4020BFRKG/IO/US-100

Continuous shock resistance		EN 60068-2-27 Ea	40 g 6 ms; 4000 shocks each in every direction of the 3 coordinate axes
Fast temperature change		EN 60068-2-14 Na	TA = -40 °C; TB = 85 °C; t1 = 30 min; t2 = < 10 s; 50 cycles
MTTF	[years]	580	
Embedded software included		yes	
UL approval		Ta	-25...70 °C
		Enclosure type	Type 1
		power supply	Limited Voltage/Current
		UL Approval no.	A035
		File number UL	E174191
Mechanical data			
Weight	[g]	145.4	
Housing		rectangular	
Mounting		flush mountable	
Dimensions	[mm]	40 x 40 x 54	
Materials		brass white bronze coated; sensing face: PBT orange; LED window: PEI; lock nuts: brass white bronze coated	
Displays / operating elements			
Display		switching status	4 x LED, yellow lights
Accessories			
Items supplied		lock nuts: 2	
Remarks			
Pack quantity		1 pcs.	
Electrical connection - plug			

Connector: 1 x M12; coding: A



IM5183

Inductive sensor with IO-Link

IMC4020BFRKG/IO/US-100

Connection

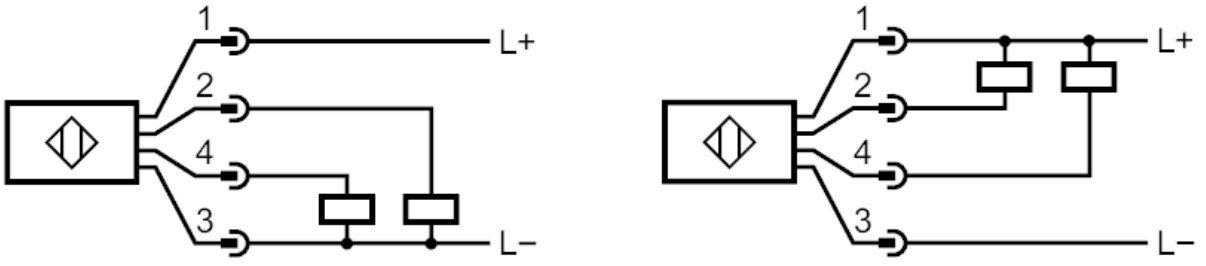

2:	OUT 2
4:	OUT / IO-Link 1