Hand Held Instrument (1593 Series)



KEY FEATURES

- Electronic instrument enclosures, ideally suited for mounting printed circuit boards.
- Ergonomically designed for a comfortable fit into the user's hand.
- Two piece lap joint construction provides protection against dust accumulation and splashing water.
- Molded in a choice of black or grey general purpose ABS plastic.
- Unit is secured with self-tapping screws.

ACCESSORIES



Replacement Screws

Package of 100 self-tapping #4 oval head:
1593KS100 .875" (22.2mm) for K, L & X
1593MS100 .625" (15.9mm) for S & T
1593QS100 .75"" (19.1mm) for J, N, P, Q, D & Y



Belt or Pocket Clip

Molded from tough nylon, includes 2 nylon screws and mounting template.
Black - **1599CLIP**
Grey - **1599CLIPGY**



P.C. Board Screws

Self-tapping type, used for bosses in the 1591 lid for P.C. board installation. #4 x 1/4" (6.4 mm)
1593ATS50 - Package of 50
1593ATS100 - Package of 100



Optional Infrared Panel

Sold in packages of 10
1593DIR10 for 1593D
1593NIR10 for 1593N
1593PIR10 for 1593K, L, P, Q, Y & X
1593SIR10 for 1593S & T

CANADA
Guelph, Ontario (519) 822-2960
St. Laurent, Quebec (514) 343-9010
USA
Cheektowaga, NY (716) 651-0086

www.hammondmfg.com

EUROPE
Basingstoke, UK +44 1256 812812

AUSTRALASIA
Queenstown, SA, Australia +61 8 8240 2244

©



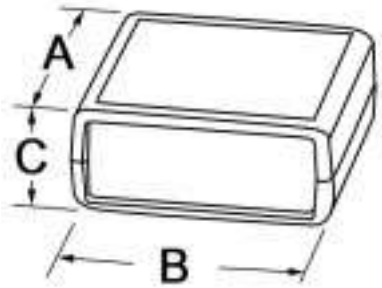

Part Number		Units	Dimensions			Battery Compartment	Front Open (w/panel)	Rear Open (w/panel)
Black	Grey		A	B	C			
1593KBK	1593KGY	inch mm	2.6 66	2.6 66	1.1 28	N	Y	Y
1593LBK	1593LGY	inch mm	3.6 92	2.6 66	1.1 28	N	Y	Y
1593NBK	1593NGY	inch mm	4.3 110	2.9 75	1.0 25	N	Y	Y
1593XBK	1593XGY	inch mm	5.5 140	2.6 66	1.1 28	N	Y	Y

NOTE: 1593N is designed to house the smart card readers.



Optional Infrared Panel
Sold in packages of 10
1593NIR10 for 1593N
1593PIR10 for 1593K, L & X



Replacement Screws
Package of 100 self-tapping #4 oval head:
1593KS100 .875" (22.2mm) for K, L & X
1593QS100 .75"" (19.1mm) for N



P.C. Board Screws
Self-tapping type, used for bosses in the 1591 lid for P.C. board installation. #4 x 1/4" (6.4 mm)
1593ATS50 - Package of 50
1593ATS100 - Package of 100

Hand Held Instrument (1593 Series)

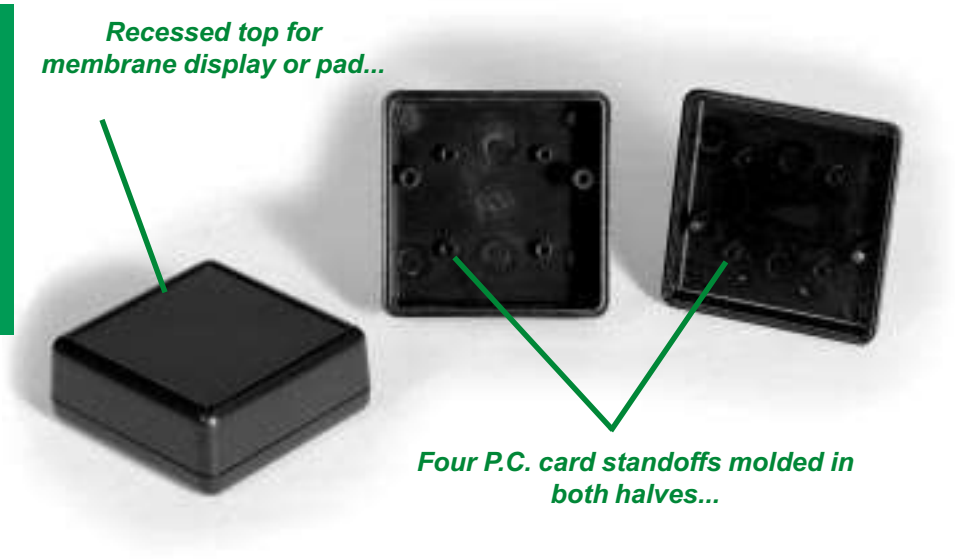

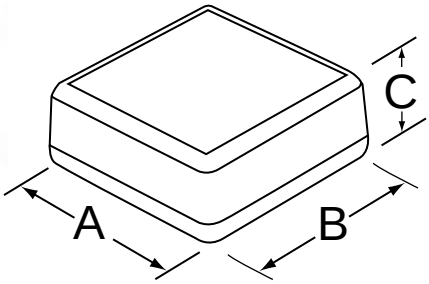

Part Number		Units	Dimensions			Battery Compartment	Front Open (w/panel)	Rear Open (w/panel)
Black	Grey		A	B	C			
1593JBK	1593JGY	inch	2.6	2.6	1.1	N	N	N
		mm	66	66	28			

Replacement Screws

Package of 100 self-tapping #4 oval head:
1593QS100 .75"" (19.1mm)

PCB Screws

To mount P.C. boards into standoffs
(#4 x 1/4" pan head screws)
1593ATS100 - Package of 100
1593ATS50 - Package of 50



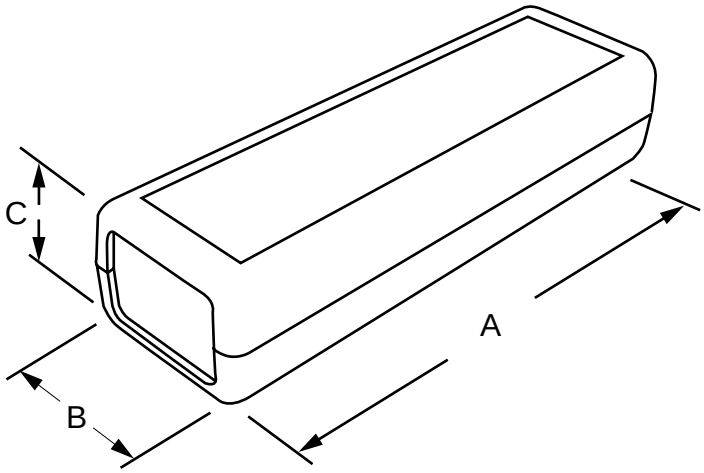

Part Number		Units	Dimensions			Battery Compartment	Front Open (w/panel)	Rear Open (w/panel)
Black	Grey		A	B	C			
1593DBK	1593DGY	inch	4.5	1.4	1.0	N	Y	Y
		mm	114	36	25			

Optional Infrared Panel

1593DIR10 - Package of 10

Replacement Screws

Package of 100 self-tapping #4 oval head:
1593QS100 .75"" (19.1mm)

PCB Screws

To mount P.C. boards into standoffs
(#4 x 1/4" pan head screws)
1593ATS100 - Package of 100
1593ATS50 - Package of 50

©
CANADA
Guelph, Ontario (519) 822-2960
St. Laurent, Quebec (514) 343-9010
USA
Cheektowaga, NY (716) 651-0086

www.hammondmfg.com

EUROPE
Basingstoke, UK +44 1256 812812

AUSTRALASIA
Queenstown, SA, Australia +61 8 8240 2244

Hand Held Instrument (1593 Series)

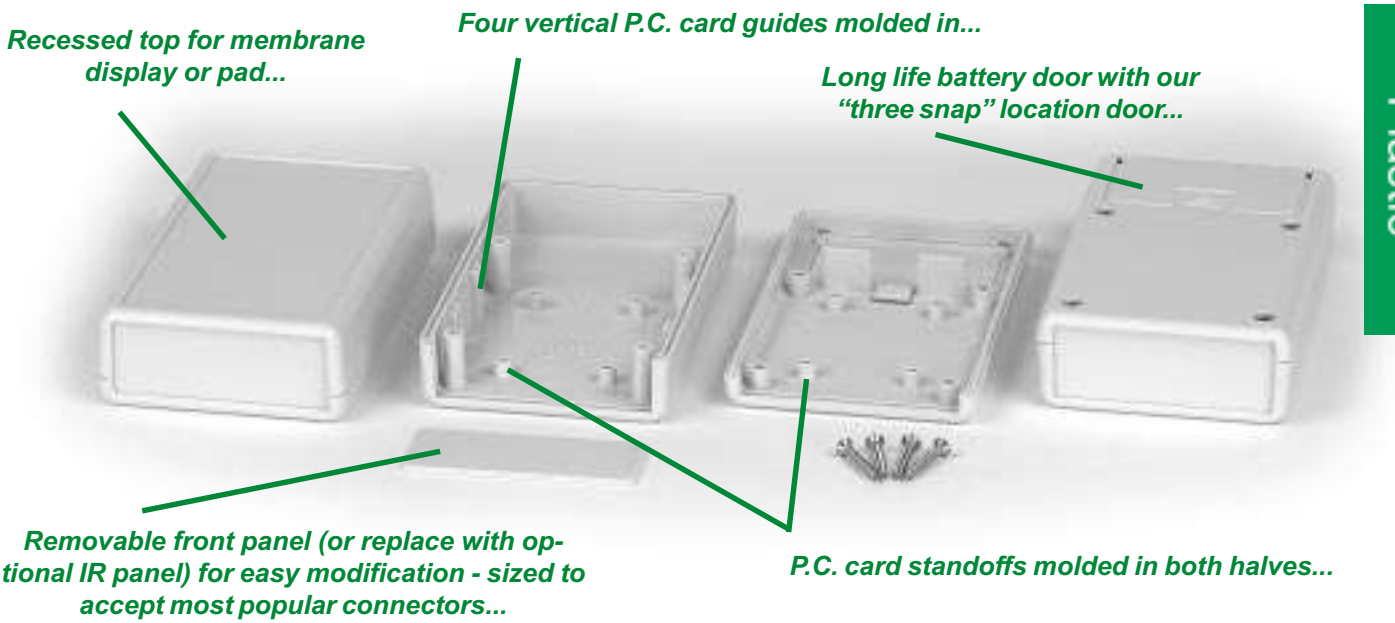

Part Number		Units	Dimensions			Battery	Front Open	Rear Open
Black	Grey		A	B	C	Compartment	(w/panel)	(w/panel)
1593SBK	1593SGY	inch	3.6	2.6	.83	Y*	Y	N
		mm	92	66	21			
1593PBK	1593PGY	inch	3.6	2.6	1.1	Y	Y	N
		mm	92	66	28			
1593TBK	1593TGY	inch	4.4	2.6	.83	Y*	Y	N
		mm	112	66	21			
1593QBK	1593QGY	inch	4.4	2.6	1.1	Y	Y	N
		mm	112	66	28			
1593YBK	1593YGY	inch	5.5	2.6	1.1	Y	Y	N
		mm	140	66	28			

NOTES: * Due to their low profile design, the 1593S & 1593T models will not accept batteries larger than AAA.

Battery Holder Kits

- Designed for our battery door enclosures.
- Kits include all the parts required to install the batteries
- Kit includes the battery holder, wires, divider and foam anti-rattle pad.

Part Number	Battery holder kit for:
BH1AAWKIT	1 AA Cell
BH2AAWKIT	2 AA Cells
BH1AAAWKIT	1 AAA Cell
BH2AAAWKIT	2 AAA Cells
BH3AAAWKIT	3 AAA Cells
BH4AAAWKIT	4 AAA Cells
BS61KIT	1 - 9V Cell

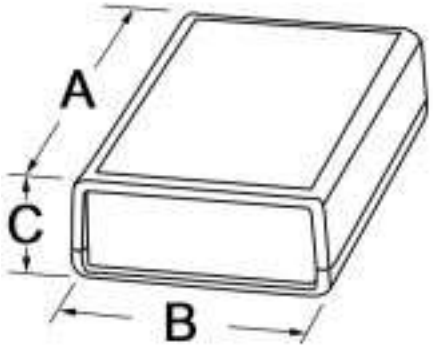

Optional Infrared Panel

Package of 10
1593PIR10 - for 1593P, Q & Y
1593SIR10 - for 1593S & T

Replacement Screws

Package of 100 self-tapping #4 oval head:
1593MS100 .625"" (15.9mm) for 1593S & T
1593QS100 .75"" (19.1mm) for 1593P, Q & Y

PCB Screws

To mount P.C. boards into standoffs
(#4 x 1/4" pan head screws)
1593ATS100 - Package of 100
1593ATS50 - Package of 50