VARIMETER PRO
Over- and Undervoltage Relay
IL 9077, IP 9077, SL 9077, SP 9077

0222093

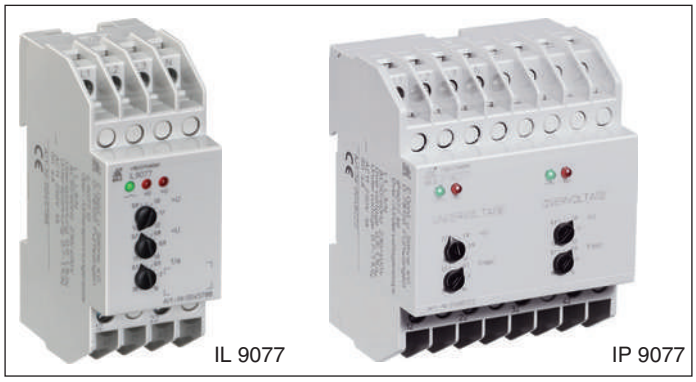

Function Diagram IL 9077

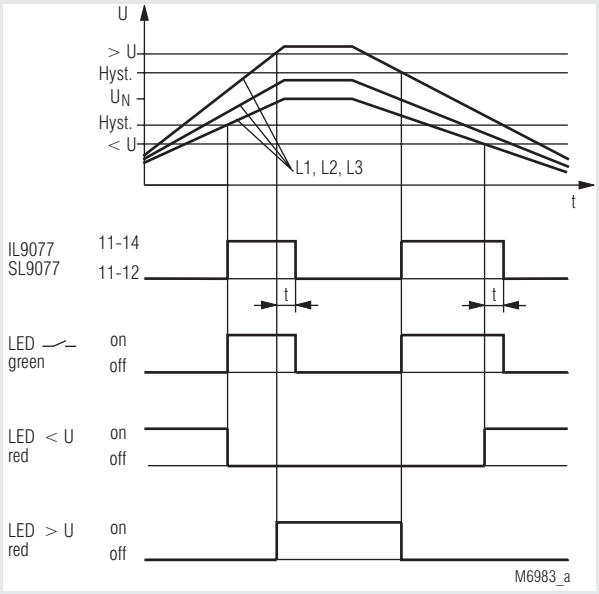

Circuit Diagram

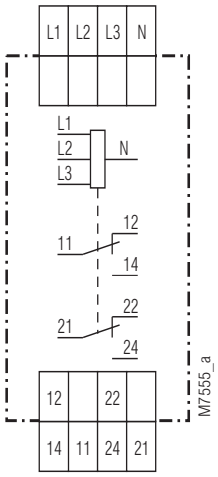

IL 9077.12, SL 9077.12

- According to IEC/EN 60 255-1
- Identification of overvoltage, undervoltage and phase failure
- With asymmetry identification as an option
- Mains fault diagnostics with a number of LEDs
- Setting values for overvoltage and undervoltage can be set separately
- Large Setting Ranges 0.9 ... 1.3 U_N and 0.7 ... 1.1 U_N
- Time delay variable between 0.1 ... 20 s
- Closed circuit operation
- No auxiliary voltage
- Independant of phase sequence
- As option with phase sequence detection
- Single-phase connection possible
- Optionally for 3P3W Systems
- 2 changeover contacts, at IP/SP 9077 2 x 2 changeover contacts
- Devices available in 2 enclosure versions:
  I-model: depth 59 mm, with terminals at the bottom for installation systems and industrial distribution systems according to DIN 43 880
  S-model: depth 98 mm, with terminals at the top for cabinets with mounting plate and cable duct
- IL 9077, SL 9077: width 35 mm
  IP 9077, SP 9077: width 70 mm

Approvals and Markings

A025518

*) only IL 9077

Applications

Monitoring of three-phase voltage systems to identify overvoltage and undervoltage, e.g. to monitor in-house generation equipment in accordance with VDE 0100.

Function

All 3 phase voltages are measured with N (L1 and L2 are measured against L3 in the case of equipment without an N connection). If they are in the acceptable range, a green LED goes on and the output relay is activated. If at least one phase exceeds the setting value for overvoltage (variable between 0.9 ... 1.3 U_N) or if at least one phase falls short of the setting value for undervoltage (variable between 0.7 ... 1.1 U_N), the output relay releases after the set time delay and the green LED goes off (fault state). 2 red LEDs then indicate the cause of the fault:
- Undervoltage " < U"
- Overvoltage " > U"

When all 3 phase voltages are below the chosen setting value for overvoltage and above the chosen setting value for undervoltage again, the relevant red LED goes out, the output relay is activated again and the green LED goes on again (acceptable state).
When the system returns to an acceptable state, there is a hysteresis of about 4 % of the set value with both the set voltage thresholds.
On the unit with phase sequence detection IL/SL 9077/003 (only available without neutral) the wrong phase sequence is handled like undervoltage: The red LED "<U" is active and the output relay switches off.
The model with asymmetry identification IL/SL 9077/010 monitors the symmetry of the three-phase voltage system as well. When all 3 voltages are in the acceptable range between the two setting values here, but there is voltage asymmetry of more than about 6 ... 8 %, the output relay releases after the set time delay and the LED that is green when the state is acceptable goes red. (This model can, for example, also be used for immediate identification of the regeneration of failed phases by feedback).
The IP/SP 9077.39 is an under- and overvoltage relay with seperate output relays (each with 2 changeover contacts) for undervoltage and overvoltage monitoring. For every output a seperate delay 0.1 ... 20 s is adjustable.

All technical data in this list relate to the state at the moment of edition. We reserve the right for technical improvements and changes at any time.

Function Diagram IP 9077

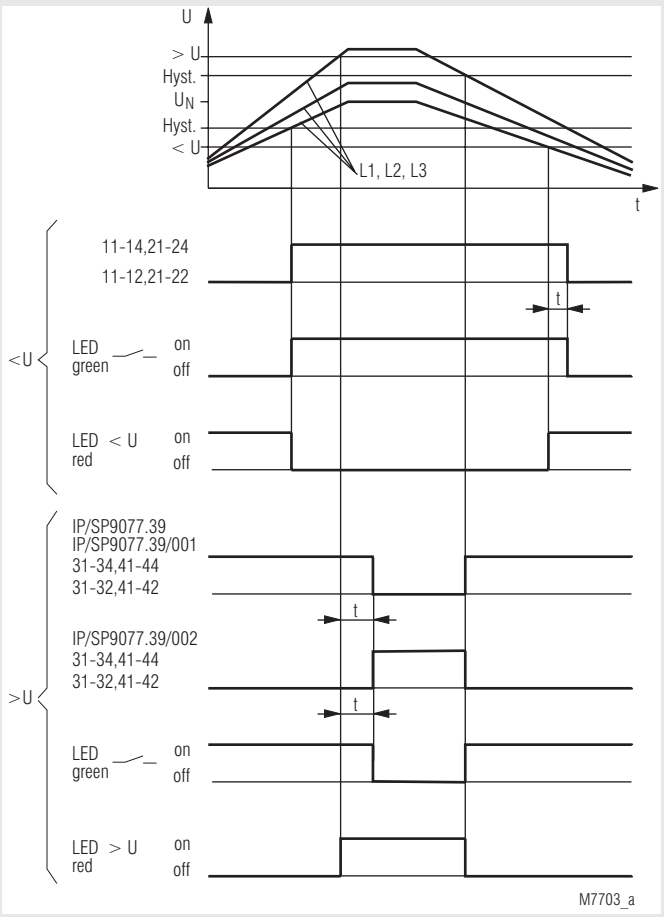

Circuit Diagrams

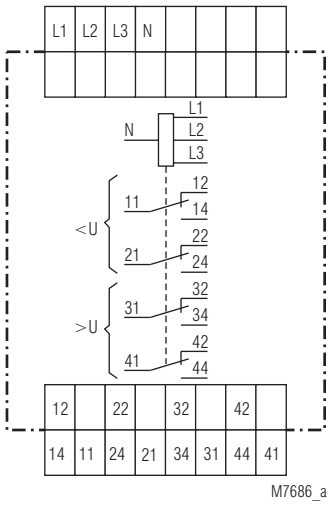

IP 9077.39, SP 9077.39

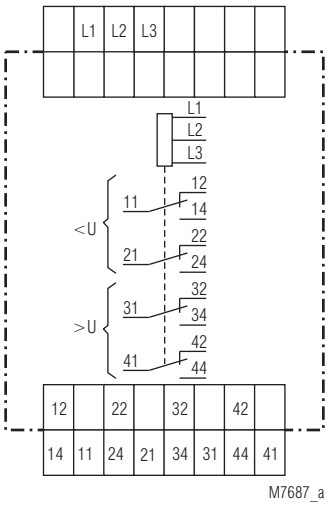

IP 9077.39/001, SP 9077.39/001
IP 9077.39/002, SP 9077.39/002

Indicators

green LED —/— :	state
green LED goes red:	voltage asymmetry (only IL/SL 9077/010)
red LED " < U":	fault message / undervoltage
red LED " > U":	fault message / overvoltage

Notes

The terminals L1, L2 and L3 have to be bridged if the relay is used in single phase systems. (For 3p3w units L1 and L2 have to be linked).
The maximum fault delay amounts to only about 0.6 s if there is a total failure of phase L3.
The overvoltage output on IP/SP 9077.39/002 can only switch if the voltage between L2 and L3 is > 0.7 U_N as the unit works without auxiliary supply.

Technical Data

Input

Nominal voltage U_N:

single-phase connection:	AC 100V , 115 V, 220 V, 230 V, AC 400 V, 415 V, 440 V, 500 V
3-phase without neutral connection::	3AC 100 V, 115 V, 220 V, 230 V, 3AC 400 V, 415 V, 440 V, 480 V, 500 V
3-phase with neutral connection:	3/N AC 100 V / 58 V; 3/N AC 110 V / 64 V; 3/N AC 200 V / 115 V; 3/N AC 220 V / 127 V; 3/N AC 230 V / 133 V; 3/N AC 400 V / 230 V; 3/N AC 415 V / 240 V; 3/N AC 440 V / 254 V; 3/N AC 480 V / 277 V; 3/N AC 500 V / 290 V
Voltage range:	0.7 ... 1.3 U_N
Maximum overload:	1.35 U_N, permanent
Nominal consumption:	approx. 8 VA (L3-N) (approx. 16 VA for IP 9077)
Nominal frequency:	50 / 60 Hz

Setting Ranges

Setting value for overvoltage "> U":	variable between 0.9 ... 1.3 U_N
Setting value for undervoltage "< U":	variable between 0.7 ... 1.1 U_N
Hysteresis:	approx. 4 % of the set value in each case
Time delay:	variable between 0.1 ... 20 s
Threshold for asymmetry identification	
IL/SL 9077/010:	approx. 6 ... 8 % phase asymmetry

Output

Contacts		
IL/SL 9077.12:	2 changeover contacts	
IP/SP 9077.39:	2 x 2 changeover contacts	
Contact material:	AgNi	
Switching voltage:	AC 250 V	
Thermal current I_{th}:	4 A	
Switching capacity		
to AC 15:		
NO contact:	3 A / AC 230 V	IEC/EN 60 947-5-1
NC contact:	2 A / AC 230 V	IEC/EN 60 947-5-1
Electrical life:		IEC/EN 60 947- 5-1
to AC 15 at 1 A, AC 230 V:	≥ 1.5 x 10^5 switching cycles	
Short circuit strength		
max. fuse rating:	4 A gL	IEC/EN 60 947-5-1
Mechanical life:	30 x 10^6 switching cycles	

General Data

Operating mode:	Continuous operation	
Temperature range:		
Operation:	- 20 ... + 60 °C	
Storage:	- 25 ... + 60 °C	
Relative air humidity:	93 % at 40 °C	
Altitude:	< 2,000 m	
Clearance and creepage distances		
rated rated impulse voltage voltage / pollution degree:	4 kV / 2	IEC 60 664-1
EMC		
Electrostatic discharge:	8 kV (air)	IEC/EN 61 000-4-2
HF irradiation		
80 MHz ... 1 GHz:	10 V / m	IEC/EN 61 000-4-3
1 GHz ... 2 GHz:	10 V / m	IEC/EN 61 000-4-3
2 GHz ... 2.7 GHz:	10 V / m	IEC/EN 61 000-4-3
Fast transients:	4 kV	IEC/EN 61 000-4-4
Surge voltages between		
wires for power supply:	2 kV	IEC/EN 61 000-4-5
between wire and ground:	2 kV	IEC/EN 61 000-4-5
Interference suppression:	Limit value class B	EN 55 011

Technical Data

Degree of protection:	Housing: IP 40	IEC/EN 60 529
	Terminals: IP 20	IEC/EN 60 529
Housing:	Highly non-flammable thermoplastic with V0 behaviour according to UL subject 94	
Vibration resistance:	Amplitude 0.35 mm, frequency 10 ... 55 Hz	IEC/EN 60 068-2-6
Climate resistance:	20 / 060 / 04	IEC/EN 60 068-1
Wire connection:	2 x 2.5 mm^2 solid or 2 x 1.5 mm^2 stranded ferruled DIN 46 228-1/-2/-3/-4	
Wire fixing:	Flat terminals with self-lifting clamping piece	IEC/EN 60 999-1
Fixing torque:	0.8 Nm	
Mounting:	DIN rail	IEC/EN 60 715

Weight

IL 9077:	110 g
SL 9077:	137 g
IP 9077:	210 g
SP 9077:	259 g

Dimensions

Width x height x depth

IL 9077:	35 x 90 x 59 mm
SL 9077:	35 x 90 x 98 mm
IP 9077:	70 x 90 x 59 mm
SP 9077:	70 x 90 x 98 mm

Standard Types

IL 9077.12 3/N AC 400 / 230 V 0.1 ... 20 s

Article number:	0045788
• Output:	2 changeover contacts
• Nominal voltage U_N:	3/N AC 400/230 V
• De-energized on trip	
• Variable time delay	0.1 ... 20 s
• Width:	35 mm

SL 9077.12 3/N AC 400 / 230 V 0.1 ... 20 s

Article number:	0054758
• Output:	2 changeover contacts
• Nominal voltage U_N:	3/N AC 400/230 V
• De-energized on trip	
• Variable time delay	0.1 ... 20 s
• Width:	35 mm

Variants

I_ 9077._ _/001:	3p3w, de-energized on trip
IL 9077.12/003:	3p3w, de-energized on trip with phase sequence detection
IL 9077.12/010:	3p4w, de-energized on trip with asymmetry detection
IL 9077.12/011:	3p3w, de-energized on trip with asymmetry detection
IL 9077.12/800:	with fast respone and high overload at overvoltage. See datasheet IL 9077/800.
IP 9077.39:	3p4w, de-energized on trip
IP 9077.39/002:	3p3w, undervoltage output de-energized on trip, overvoltage output energized on trip

Ordering example for variants

