NOTES

MATERIAL: -DIECAST ALUMINUM ALLOY,
-FOUR 6-32 Phillips Screws

WATERPROOFING KIT AVAILABLE
PART # 1590UG
THE GASKET KIT WILL AFFORD
PROTECTION AGAINST LIQUID TO
NEMA 4 AND IP65 LEVELS.

THIS ENCLOSURE IS ALSO
AVAILABLE IN BLACK AND GRAY
TEXTURE FINISH.

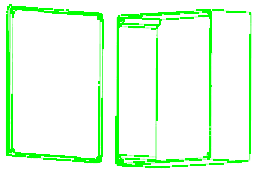

3D VIEW
(NOT TO SCALE)

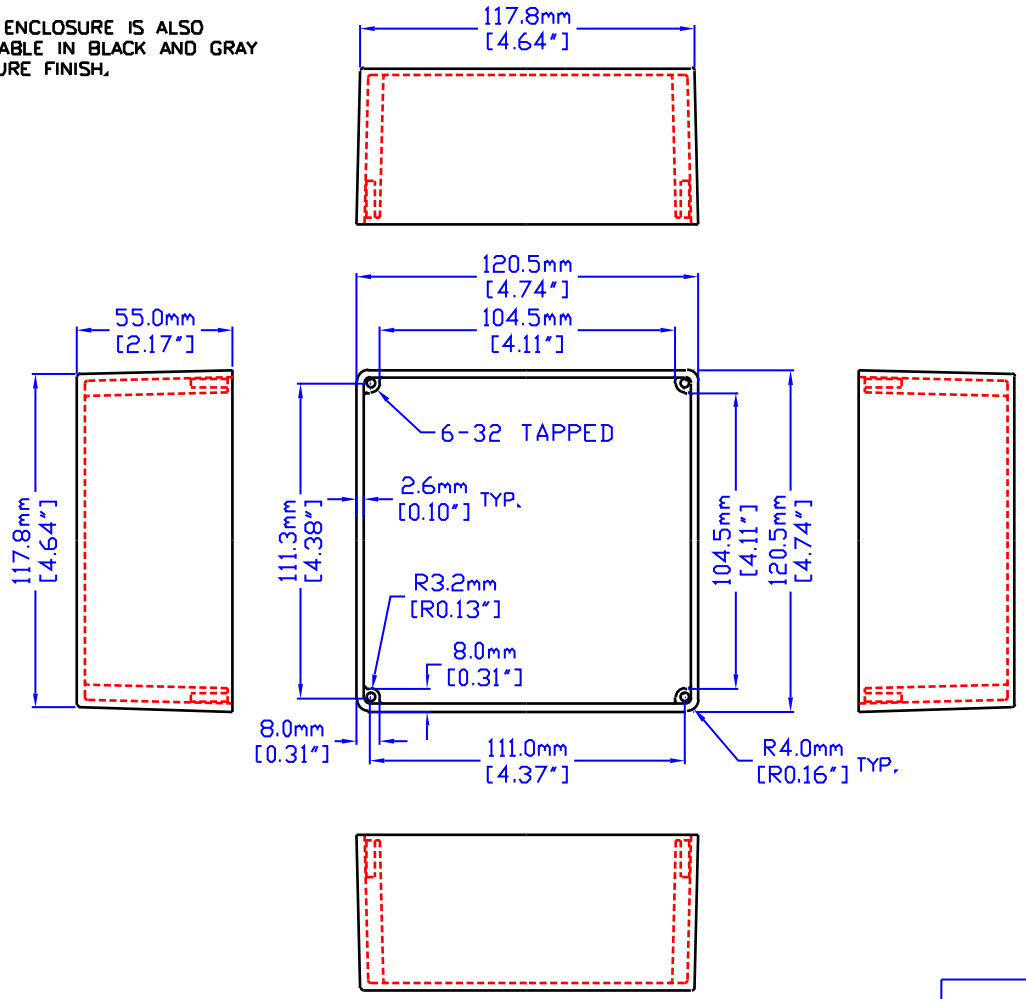

VIEW OF BOX (LID REMOVED)

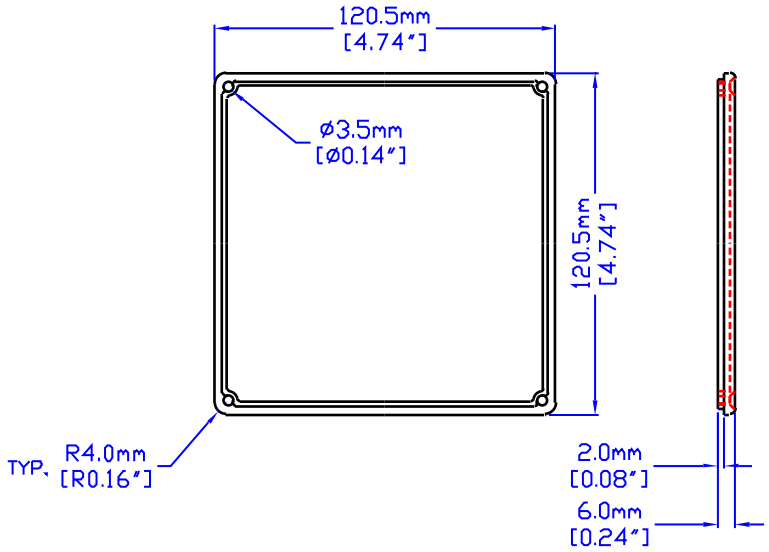

VIEW INSIDE LID

HAMMOND MANUFACTURING

1590U

CANADA - PH (519) 886 7170 - FAX (519) 886 8311
U.S.A. - PH (716) 631 5700 - FAX (716) 631 1156