Thermo Electric Devices

Liquid Heat Exchangers

Thermo Electric Devices' liquid heat exchangers are effective for cooling high powered applications where minimal temperature rise is desired or they can be used as the flow area where a liquid's temperature is to be controlled. One of these, the LI-401, can be used with two thermoelectrics. The liquid heat exchangers are designed for use with our thermoelectric devices.

Features

- All copper construction
- Machined finish
- Solderable surface
- External portion of tubes:
  Tube Length = 25.4mm (1") long,
  6.4mm (0.25") outer diameter
- Internal waterways are
  6.4mm (0.25") inner diameter
- Sensor hole for temperature
  monitoring 1.58mm (0.062") diameter,
  19mm (0.75") deep
- Tapped or clearance assembly holes
  Metric M3 (English 6-32)

Mechanical Characetersitics

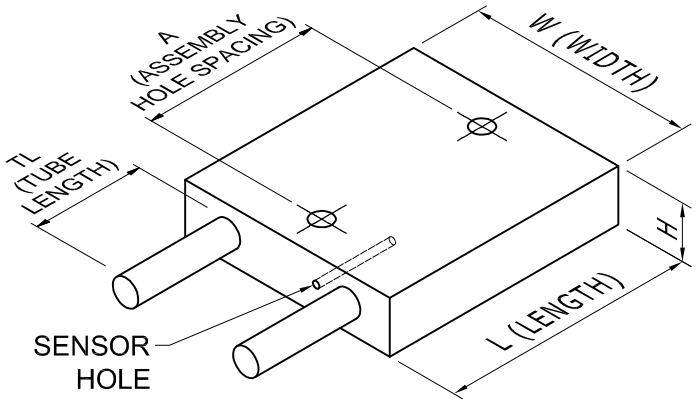

Series #	Assembly Hole Spacing A	Number & maximum size of TEC
-100	38mm (1.5") O.C.	1 x 34mm (1.34")
-200	51mm (2.0") O.C.	1 x 44mm (1.73")
-300	76mm (3.0") O.C.	1 x 62mm (2.44")
-400	51mm (2.0") O.C. (2 sets)	2 x 44mm (1.73")

Options	Description
NH	No Holes
CL*	Clearance Holes
TH-E	Tapped Holes - English
TH-M	Tapped Holes - Metric

*Standard

Dimensions			
Model	Width mm (in)	Length mm (in)	Height mm (in)
LI-101	32 (1.25)	51 (2.0)	9.7 (0.38)
LI-102	51 (2.0)	32 (1.25)	9.7 (0.38)
LI-201	51 (2.0)	57 (2.25)	12.7 (0.50)
LI-301	64 (2.5)	89 (3.50)	12.7 (0.50)
LI-401	51 (2.0)	152 (6.00)	12.7 (0.50)

Models

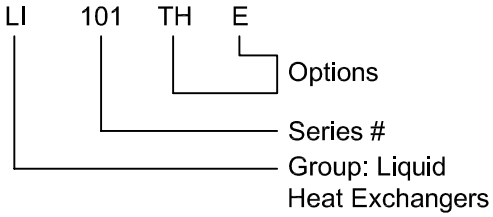

Thermo Electric Devices
Unit 1 Draycott Business Centre
Draycott
GL56 9JY
UK

T: 01386 701703
F: 01386 701618
E: mail@thermoelectricdevices.co.uk
W: www.thermoelectricdevices.co.uk

Thermo Electric Devices reserve the right to change specification without notice