OTHER MOUNTING SYSTEMS









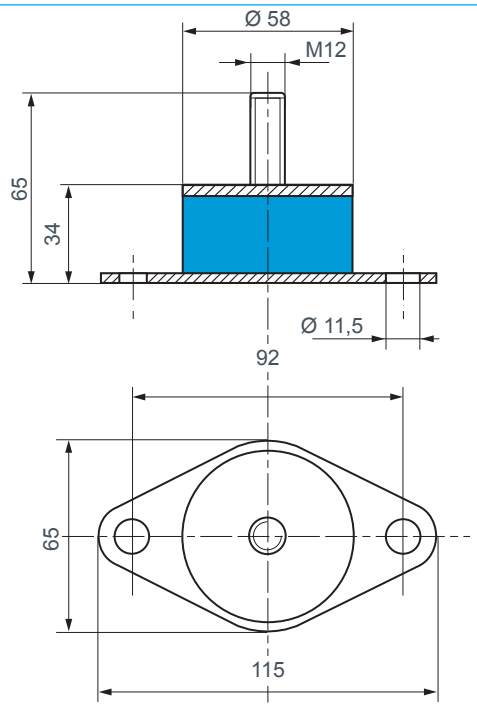

Deflection : 5 mm
Maximum load : 250 daN
Reference **539243-55**

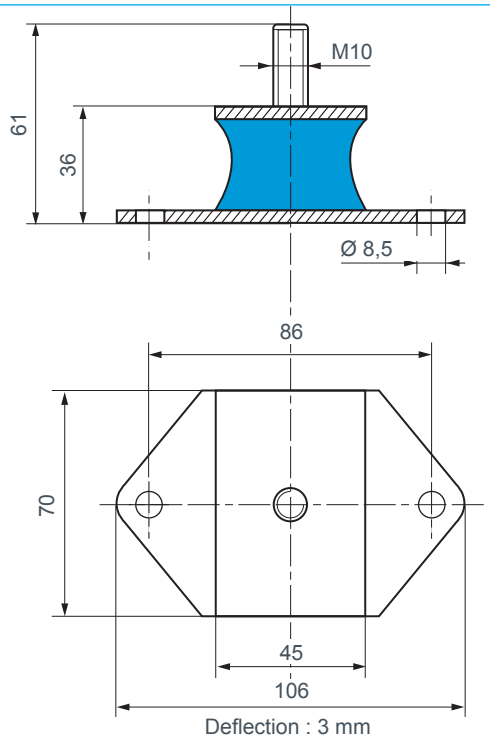

Deflection : 3 mm
Maximum load : 150 daN
Reference **534135**

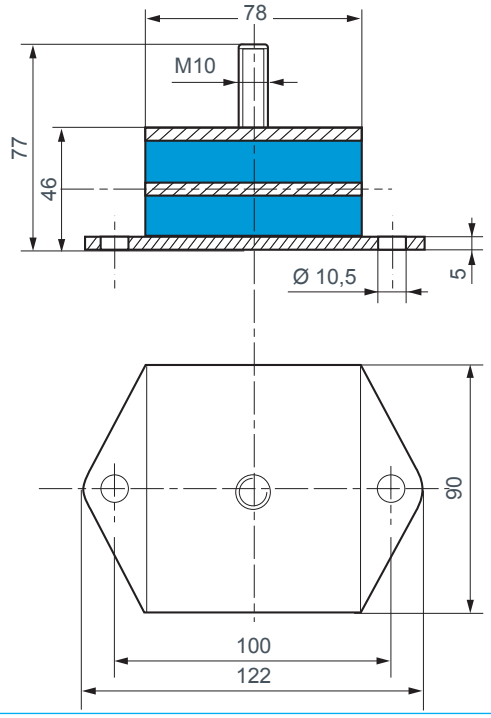

Compression :

Deflection : 4.5 mm
Maximum load : 800 daN

Shear :

Deflection : 6.5 mm
Maximum load : 80 daN

Reference **534079**

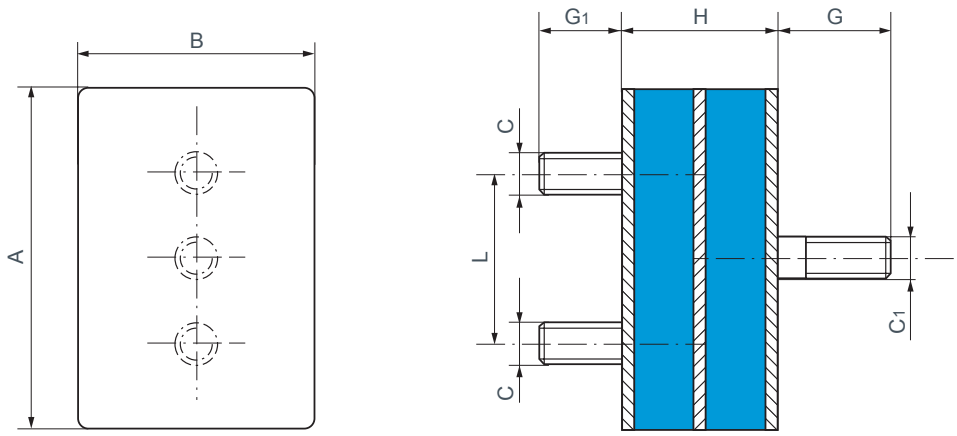

DIMENSIONS

Reference	A (mm)	B (mm)	H (mm)	C	C1	G (mm)	G1 (mm)	L (mm)	Number intermed plates
538076	100	70	46	M10	M12	34	23	50	-
539214	100	70	46	M10	M12	31	23	50	2
539377*	100	70	46	M10	M12	33	23	50	1

* This reference has 4 screws.

OPERATING CHARACTERISTICS

Reference	Hardness	Static load (daN)	Deflection (mm)
538076	45	300	5
539214	40	300	1
539377*	60	300	0,7

* This reference has 4 screws.

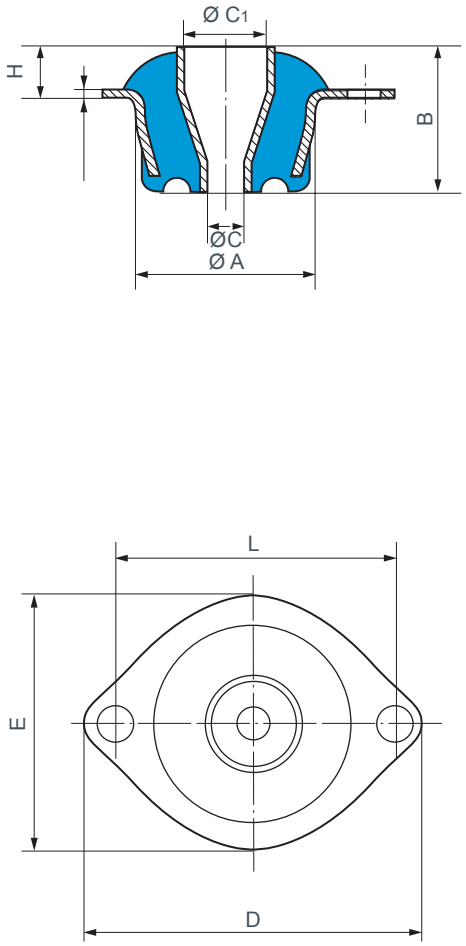

Reference 539004

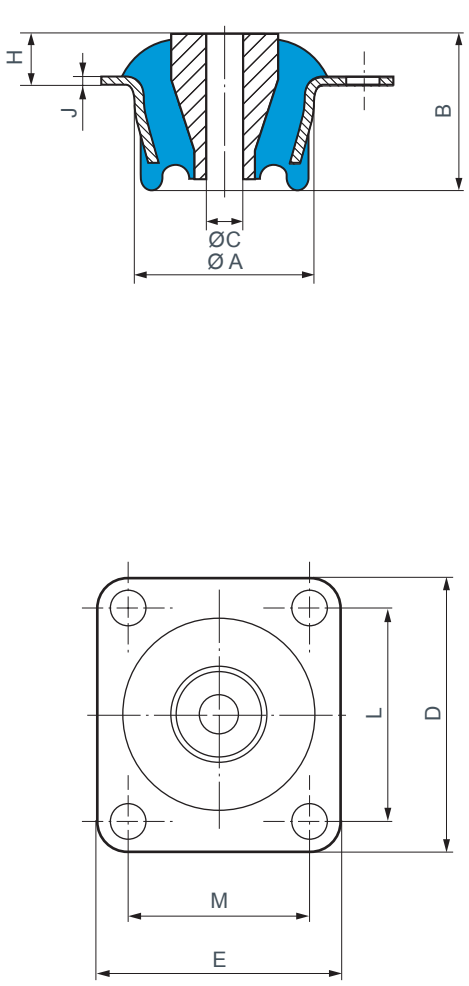

Reference 539743

DIMENSIONS

Reference	Ø A (mm)	B (mm)	Ø C (mm)	Ø C_1 (mm)	D (mm)	E (mm)	H (mm)	J (mm)	L (mm)	M (mm)
539004	54	52	15,8	25,4	102	76	13,5	3	82,5	-
539743	74,6	71	16,25	-	105	92	33,5	3	82,5	69,5

OPERATING CHARACTERISTICS

Reference	Hardness	Axial stiffness	
		Load (daN)	Deflection (mm)
539004	50	150	2
	60	230	2
539743	45	200	4,5

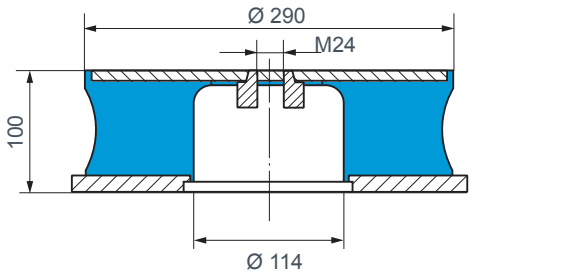

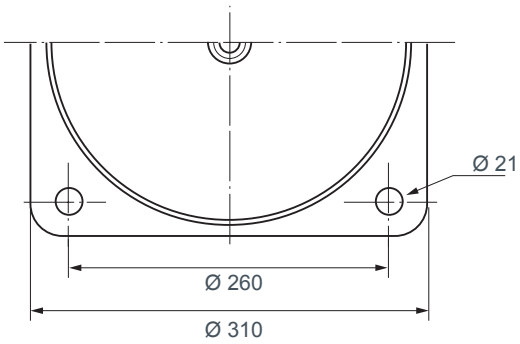

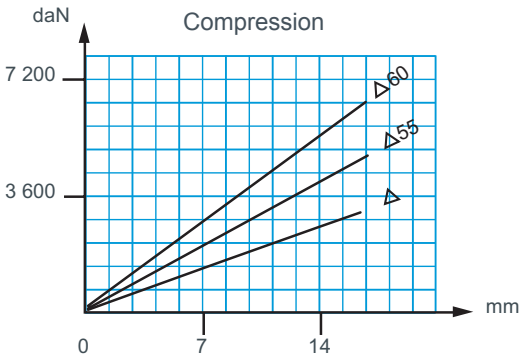

Reference 539972
Also exists with anti-rebound stop - reference 539971