PN2599
PN-1-1BREG14-MFRKG/US/ /V

Pressure sensors

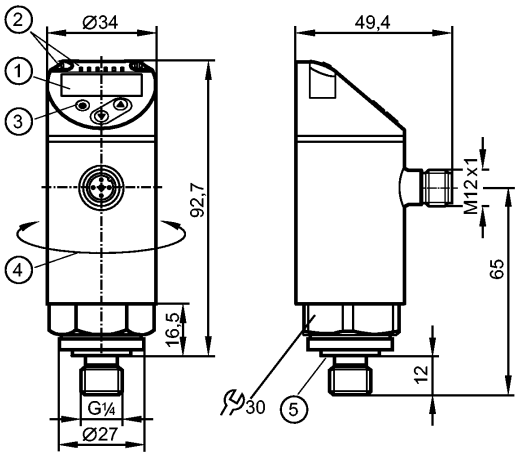

1: 4-digit alphanumeric display / alternating indication of red and green
2: LEDs (display unit / switching status)
3: Programming button
4: Upper part of the housing can be rotated by 345°
5: sealing FKM / DIN 3869

IO-Link

Product characteristics

Electronic pressure sensor
M12 connector
Function programmable
Measuring element: ceramic-capacitive pressure measuring cell
Process connection: G ¼ A / M5 I (according to DIN EN ISO 1179-2)
2 outputs OUT1 = switching output OUT2 = switching output or analogue output
4-digit alphanumeric display / alternating indication of red and green
Measuring range: -1000...1000 mbar / -14.5...14.5 psi

Application

Application		Type of pressure: relative pressure Group 2 fluids according to the Pressure Equipment Directive (PED), group 1 fluids on request	
Pressure rating		20000 mbar	290 psi
Bursting pressure min.		50000 mbar	725 psi
Vacuum resistance	[mbar]	-1000	
Medium temperature	[°C]	-25...80	

Electrical data

Electrical design		DC PNP/NPN
Operating voltage	[V]	18...30 DC [1])
Current consumption	[mA]	< 35
Insulation resistance	[MΩ]	> 100 (500 V DC)
Protection class		III
Reverse polarity protection		yes

Outputs

Output		2 outputs OUT1 = switching output OUT2 = switching output or analogue output
Output function		2 x normally open / closed programmable or 1 x normally open / closed programmable + 1 x analogue (4...20 mA / 0...10 V; scaleable 1:5)
Current rating	[mA]	250
Voltage drop	[V]	< 2

PN2599 - Electronic pressure sensor - eclass: 27201302 / 27-20-13-02

Short-circuit protection		pulsed	
Overload protection		yes	
Switching frequency	[Hz]	≤ 500	
Analogue output		4...20 mA; 0...10 V	
Max. load	[Ω]	4...20 mA: max. 500	
Min. load resistance	[Ω]	0...10 V: min. 2000	
Measuring / setting range			
Measuring range		-1000...1000 mbar	-14.5...14.5 psi
Setting range			
Set point, SP		-990...1000 mbar	-14.40...14.50 psi
Reset point, rP		-995...995 mbar	-14.45...14.45 psi
Analogue start point, ASP		-1000...600 mbar	-14.5...8.7 psi
Analogue end point, AEP		-600...1000 mbar	-8.7...14.5 psi
in steps of		5 mbar	0.05 psi
Accuracy / deviations			
Accuracy / deviations (in % of the span) Turn down 1:1			
Switch point accuracy		< ± 0.4	
Characteristics deviation *)		< ± 0.25 (BFSL) / < ± 0.5 (LS)	
Hysteresis		< ± 0.1	
Repeatability **)		< ± 0.1	
Long-term stability ***)		< ± 0.05	
Temperature coefficients (TEMPCO) in the temperature range -25...80° C (in % of the span per 10 K)			
Greatest TEMPCO of the zero point		0.2	
Greatest TEMPCO of the span		0.2	
Reaction times			
Power-on delay time	[s]	0.3	
Min. response time switching output	[ms]	< 1.5	
Delay time programmable dS, dr	[s]	0...50	
Damping for the switching output (dAP)	[s]	0...4	
Damping for the analogue output (dAA)	[s]	0...4	
Response time analogue output	[ms]	< 3	
Integrated watchdog		yes	
Software / programming			
Programming options		hysteresis / window function; NO / NC; on delay, off delay; damping; display unit; current/ voltage output	
Interfaces			
IO-Link device			
Transfer type		COM2	
IO-Link revision		1.1	
SDCI standard		IEC 61131-9	
IO-Link device ID		467 d / 00 01 d3 h	
Profiles		Smart Sensor: Process Data Variable; Device Identification, Device Diagnosis	
SIO mode		yes	
Required master port class		A	
Process data analogue		1	
Process data binary		2	
Min. process cycle time	[ms]	2.3	
Environment			
Ambient temperature	[°C]	-25...80	
Storage temperature	[°C]	-40...100	
Protection		IP 65 / IP 67	
Tests / approvals			
Pressure equipment directive		Sound engineering practice	
EMC		DIN EN 61000-6-2	

PN2599 - Electronic pressure sensor - eclass: 27201302 / 27-20-13-02

	DIN EN 61000-6-3	
Shock resistance	DIN EN 60068-2-27	50 g (11 ms)
Vibration resistance	DIN EN 60068-2-6	20 g (10...2000 Hz)
MTTF [Years]	138	
UL approval number	J012	
Mechanical data		
Process connection	G ¼ A / M5 I (according to DIN EN ISO 1179-2)	
Process connection sealing	FKM (to DIN 3869)	
Materials (wetted parts)	stainless steel (316L / 1.4404); Al2O3 (ceramics); FKM	
Housing materials	stainless steel (316L / 1.4404); PBT+PC-GF 30; PBT-GF 20; PC	
Switching cycles min.	100 million	
Tightening torque [Nm]	25...35 (recommended tightening torque²)	
Weight [kg]	0.247	
Displays / operating elements		
Display	Display unit	5 x LED green (mbar, psi, kPa, inH2O, inHg)
	Switching status	2 x LED yellow
		4-digit alphanumeric display / alternating indication
	Measured values of red and green	
Electrical connection		
Connection	M12 connector; Gold-plated contacts	

Wiring

Core colours

BK black
BN brown
BU blue
WH white



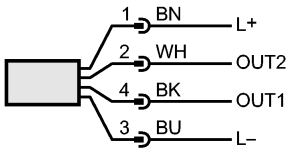

OUT1: switching output or IO-Link
OUT2: switching output or 4...20 mA / 0...10 V
Colours to DIN EN 60947-5-2

Remarks

Remarks

*) BFSL = Best Fit Straight Line / LS = Limit Value Setting
**) with temperature fluctuations < 10 K
***) in% of the span / 6 months
[1]) to EN50178, SELV, PELV
[2]) Depends on lubrication, seal and pressure rating

Pack quantity [piece]	1