Technical data sheet
Energetic diffuse sensor
Part no.: 50122554
FT318B.3/4P-M12



For Illustration purposes only

Contents

- Technical data
- Dimensioned drawings
- Electrical connection
- Diagrams
- Operation and display
- Part number code
- Notes
- Further information
- Accessories

Technical data

Leuze

Basic data

Series	318B
Operating principle	Diffuse reflection principle

Special version

Optical data

Operating range	Guaranteed operating range
Operating range, white 90%	0.001 ... 0.215 m
Operating range, gray 50%	0.001 ... 0.19 m
Operating range, gray 18%	0.003 ... 0.15 m
Operating range, black 6%	0.003 ... 0.125 m
Operating range limit, white 90%	0.001 ... 0.28 m
Operating range limit, gray 50%	0.001 ... 0.245 m
Operating range limit, gray 18%	0.003 ... 0.19 m
Operating range limit, black 6%	0.001 ... 0.16 m
Operating range limit	Typical operating range
Light source	LED, Red
Wavelength	620 nm
Transmitted-signal shape	Pulsed
LED group	Exempt group (in acc. with EN 62471)

Electrical data

Protective circuit	Polarity reversal protection
	Short circuit protected

Performance data

Supply voltage U_B	10 ... 30 V, DC, Incl. residual ripple
Residual ripple	0 ... 15 %, From U_B
Open-circuit current	0 ... 20 mA

Outputs

Number of digital switching outputs	2 Piece(s)

Switching outputs

Voltage type	DC
Switching current, max.	100 mA
Switching voltage	high: ≥(U_B-2.5V)
	low: ≤ 2.5 V

Switching output 1

Assignment	Connection 1, pin 4
Switching element	Transistor, PNP
Switching principle	Light switching

Switching output 2

Assignment	Connection 1, pin 2
Switching element	Transistor, PNP
Switching principle	Dark switching

Time behavior

Switching frequency	500 Hz
Response time	1 ms
Readiness delay	300 ms

Connection 1

Function	Signal OUT
	Voltage supply
Type of connection	Connector
Thread size	M12
Type	Male
Material	Plastic
No. of pins	4 -pin
Encoding	A-coded

Mechanical data

Dimension (Ø x L)	18 mm x 46 mm
Thread size	M18 x 1 mm
Housing material	Plastic
Plastic housing	ABS
Lens cover material	Plastic
Net weight	20 g
Housing color	Black
	Red

Operation and display

Type of display	LED
Number of LEDs	1 Piece(s)
Operational controls	Teach button

Environmental data

Ambient temperature, operation	-40 ... 60 °C
Ambient temperature, storage	-40 ... 70 °C

Certifications

Degree of protection	IP 67
Protection class	III
Approvals	c UL US
Standards applied	IEC 60947-5-2

Classification

Customs tariff number	85365019
ECLASS 5.1.4	27270903
ECLASS 8.0	27270903
ECLASS 9.0	27270903
ECLASS 10.0	27270903
ECLASS 11.0	27270903
ECLASS 12.0	27270903
ECLASS 13.0	27270903
ECLASS 14.0	27270903
ECLASS 15.0	27270903
ETIM 5.0	EC001821
ETIM 6.0	EC001821
ETIM 7.0	EC001821
ETIM 8.0	EC001821
ETIM 9.0	EC001821
ETIM 10.0	EC001821

Dimensioned drawings

All dimensions in millimeters

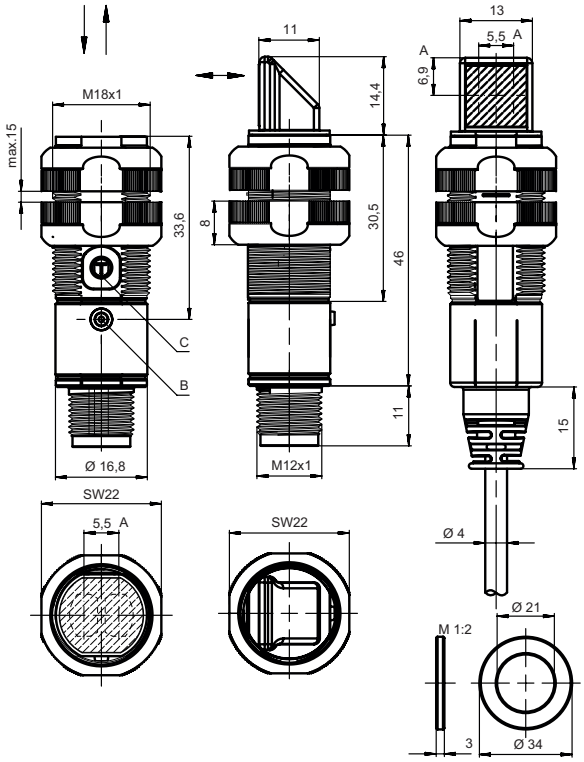

A Optical axis
B Indicator diode
C Teach button

Electrical connection

Connection 1

Function	Signal OUT
	Voltage supply
Type of connection	Connector
Thread size	M12
Type	Male
Material	Plastic
No. of pins	4 -pin
Encoding	A-coded

Pin	Pin assignment
1	V+
2	OUT 2
3	GND
4	OUT 1

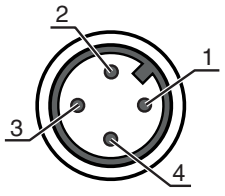

Diagrams

Typ. black/white behavior

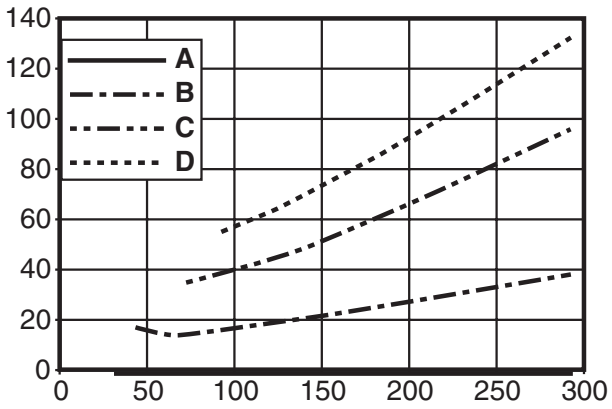

x Range [mm]
y Reduction of range [mm]

A White 90%
B Gray 50%
C Gray 18%
D Black 6%

Fading: black/white error < 50 %
The black/white error is calculated from the operating range against white and the reduction of the operating range against black:
black/white error = reduction of the operating range against black / operating range against white x 100%

Operation and display

LED	Display	Meaning
1	Green, continuous light	Operational readiness
	Yellow, continuous light	Object detected

Part number code

Part designation: **XXX318BY-AAAF.BB/CC-DDD**

XXX318B	**Operating principle** PRK: Retro-reflective photoelectric sensor with polarization filter ET: energetic diffuse reflection sensor FT: diffuse reflection sensor with fading LE: Throughbeam photoelectric sensor receiver LS: throughbeam photoelectric sensor transmitter
Y	**Light type** n/a: red light I: infrared light
AAAF	**Preset range (optional)** n/a: operating range acc. to data sheet xxxF: Preset range [mm]
BB	**Equipment** n/a: axial optics W: 90° angular optics 3: teach-in via button X: reinforced fading
CC	**Switching output / function (OUT1 = pin 4, OUT2 = pin 2):** 4: PNP transistor output, light switching P: PNP transistor output, dark switching 2: NPN transistor output, light switching N: NPN transistor output, dark switching 9: input for transmitter deactivation (deactivation with HIGH signal) D: Input for transmitter deactivation (deactivation with LOW signal) X: pin not used
DDD	**Electrical connection** n/a: cable, standard length 2000 mm, 4-wire M12: M12 connector, 4-pin (plug) 5000: cable, standard length 5000 mm, 4-wire 200-M12: cable, length 200 mm with M12 connector, 4-pin, axial (plug)

Note

A list with all available device types can be found on the Leuze website at www.leuze.com.

Notes

Observe intended use!	
	↳ This product is not a safety sensor and is not intended as personnel protection. ↳ The product may only be put into operation by competent persons. ↳ Only use the product in accordance with its intended use.

For UL applications:	
	↳ For UL applications, use is only permitted in Class 2 circuits in accordance with the NEC (National Electric Code). ↳ These proximity switches shall be used with UL Listed Cable assemblies rated 30V, 0.5A min, in the field installation, or equivalent (categories: CYJV/CYJV7 or PVVA/PVVA7)

Further information

- Sum of the output currents for both outputs, 50 mA for ambient temperatures > 40 °C
- With the set scanning range, a tolerance of the operating range is possible depending on the reflection properties of the material surface.

Accessories

Connection technology - Connection cables

	Part no.	Designation	Article	Description
	50130652	KD U-M12-4A-V1-050	Connection cable	Connection 1: Connector, M12, Axial, Female, A-coded, 4 -pin Connector, LED: No Connection 2: Open end Shielded: No Cable length: 5.000 mm Sheathing material: PVC
	50130690	KD U-M12-4W-V1-050	Connection cable	Connection 1: Connector, M12, Angled, Female, A-coded, 4 -pin Connector, LED: No Connection 2: Open end Shielded: No Cable length: 5.000 mm Sheathing material: PVC

Mounting technology - Mounting brackets

	Part no.	Designation	Article	Description
	50113548	BT D18M.5	Mounting bracket	Diameter, inner: 18 mm Design of mounting device: Angle, L-shape Fastening, at system: Through-hole mounting Mounting bracket, at device: Screw type Type of mounting device: Rigid Material: Stainless steel

Accessories

Mounting technology - Rod mounts

	Part no.	Designation	Article	Description
	50117490	BTU D18M-D12	Mounting system	Design of mounting device: Mounting system Fastening, at system: Through-hole mounting Mounting bracket, at device: Screw type Type of mounting device: Clampable, Adjustable, Turning, 360° Material: Metal

Mounting technology - Other

	Part no.	Designation	Article	Description
	50117258	BT 318P-LS	Fastening	Design of mounting device: Mounting clamp Fastening, at system: Through-hole mounting Mounting bracket, at device: Clampable Type of mounting device: Rigid Material: Plastic Shock absorber: No
	50121904 **	BT318B-OM	Fastening	Design of mounting device: Mounting clamp Fastening, at system: Through-hole mounting Mounting bracket, at device: Screw type Type of mounting device: Swiveling, Adjustable, Turning Material: Plastic Shock absorber: No

** Included in delivery contents

Note

A list with all available accessories can be found on the Leuze website in the Download tab of the article detailed page.