Product: RKCWI 4A



M12 Field Attachable Connector, IDC termination, slim metal housing, IP67, female, 4-pole, A-coded, unshielded, angled

Product Description

M12 Field Attachable Connector for decentralized field assembly, insulation displacement contact termination method (IDC), angled, female, 4-pole, A-coded, slim design, zinc diecast metal housing for harsh environment, IP65/IP67, unshielded, straight, 0,14…0,34mm², AWG 22...AWG26, rated voltage 32V, rated current 4A

Technical Drawing

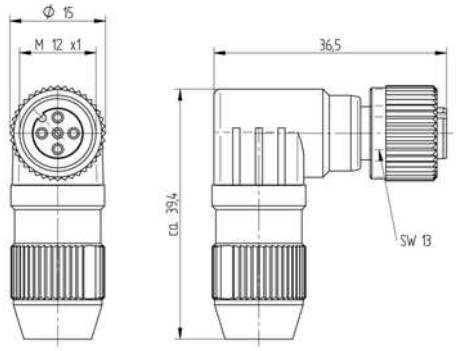

Technical Specifications

Technical Data

Product Family:	Sensor / Actuator Connectors
Product Sub Family:	M12 Standard
Brand:	Belden
Connector Type:	Field attachable
Type of Contact / Gender:	female
Connector Design:	angled
Number of Pins:	4
Coding:	A
Attachment Type:	Coupling Nut
Rated Impulse Voltage:	1,5 kV
Operating Voltage:	32 V AC/DC
Rated Current*:	4 A
Contact Resistance:	≤ 10 mOhm
Insulation Resistance:	> 10^9 Ohm
Type of Connection:	insulation displacement contact (IDC)
Maximum Wire Cross Section:	0,25mm²...0,5 mm²
Strain-Relief:	clamping cage
Suitable Cables:	Ø4...Ø5,1 mm

Ambient Temperature (Operation)*:	-40°C to +85°C
Operating Temperature (UL):	max. 85 °C
Protection Degree / IP Rating**:	IP65, IP67
Design Standard:	IEC 61076-2-101
Pollution Degree:	3 acc. to DIN EN 60664-1 (VDE 0110-1)
Overvoltage Category:	III

Materials

Contact Base Material:	CuZn
Contact Plating:	AuNi
Contact Bearer Material:	PBT
Contact Bearer Color:	black
Housing Material:	zinc diecast
Housing Color:	grey metallic
Attachment Material:	CuZn
Attachment Plating:	nickel-plated

Additional Technical Data

Fastening Torque (Attachment):	50-60 Ncm

Approvals

UL-File:	E95522
UL:	cURus

Safety & Environmental Compliance

RoHS Compliant:	yes

Notes

Note Derating:	* Notice derating
Protection Degree / IP Rating Note:	** only if mounted and locked in combination with Hirschmann / Lumberg Automation connector.

Variants

Item #	Item Description
935070251	RKCWI 4A

© 2024 Belden, Inc

All Rights Reserved.

Although Belden makes every reasonable effort to ensure their accuracy at the time of this publication, information and specifications described here in are subject to error or omission and to change without notice, and the listing of such information and specifications does not ensure product availability.

Belden provides the information and specifications herein on an "ASIS" basis, with no representations or warranties, whether express, statutory or implied. In no event will Belden be liable for any damages (including consequential, indirect, incidental, special, punitive, or exemplary damages) whatsoever, even if Belden has been advised of the possibility of such damages, whether in an action under contract, negligence or any other theory, arising out of or in connection with the use, or inability to use, the information or specifications described herein.

All sales of Belden products are subject to Belden's standard terms and conditions of sale.

Belden believes this product to be in compliance with all applicable environmental programs as listed in the data sheet. The information provided is correct to the best of Belden's knowledge, information and belief at the date of its publication. This information is designed only as a general guide for the safe handling, storage, and any other operation of the product itself or the one that it becomes a part of. The Product Disclosure is not to be considered a warranty or quality specification. Regulatory information is for guidance purposes only. Product users are responsible for determining the applicability of legislation and regulations based on their individual usage of the product.