87045 LIMOGES Cedex
Telephone number: +33 (0)5 55 06 87 87 – Fax: +33 (0)5 55 06 88 88

Centralised control auxiliary for pulse operated latching relay

Catalogue number(s): 4 124 33 / 4 124 34



CONTENTS

PAGES

1. Description, use.....
2. Range .....
3. Dimensions .....
4. Positioning - Connection.....
5. General characteristics.....
6. Compliance and Approvals.....

1. DESCRIPTION - USE

Technology:

. Changeover contact and electronic card

Use:

. For controlling several pulse operated latching relays simultaneously using one single push-button type control.

2. RANGE

Centralised control:

. Catalogue number 412 433: centralised control for 24V~ and 48V~ pulse operated latching relay

. Catalogue number 412 434: centralised control for 230V~ pulse operated latching relay

3. DIMENSIONS

Catalogue numbers 4 124 33 and 4 124 34

. Dimensions ½ module (9 mm)

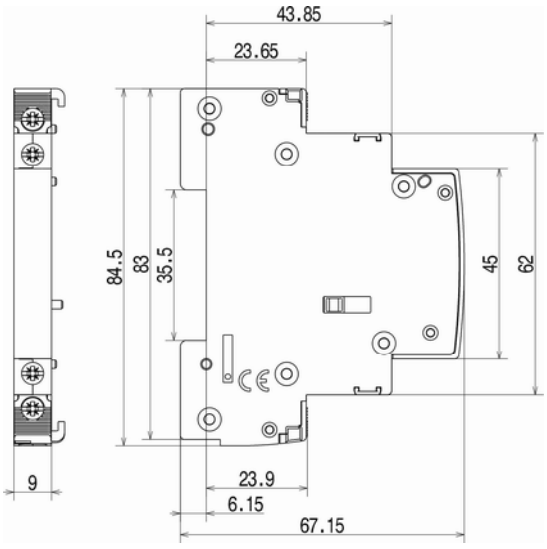

4. POSITIONING - CONNECTION

Assembly:

. Installed on the left of the Legrand modular pulse operated latching relays catalogue numbers 412 xxx.

. Tool-free fitting using plastic clips on the product to which it is attached.

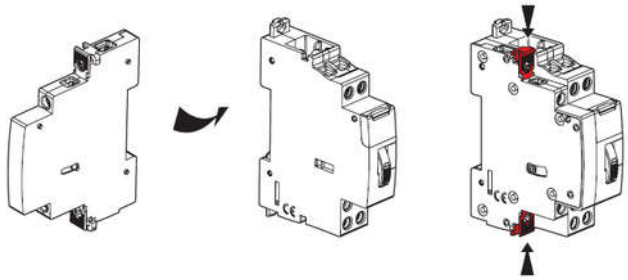

. 1 centralised control auxiliary maximum per pulse operated latching relay

. Option of adding two auxiliaries per pulse operated latching relay, a centralised control auxiliary (A) and an auxiliary signalling contact (B). In this case the control auxiliary (Cat. No. 412 433 or 412 434) must be placed directly next to the pulse operated latching relay.

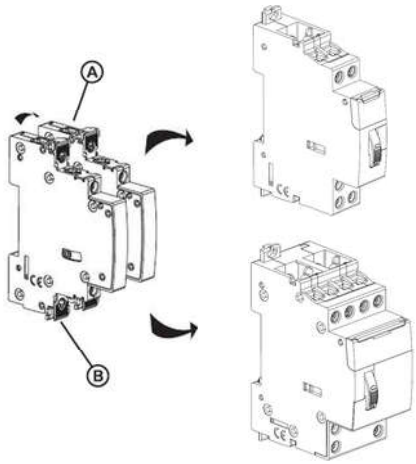

Centralised control auxiliary for pulse operated latching relay

Catalogue number(s): 4 124 33 / 4 124 34

4. POSITIONING – CONNECTION *(continued)*

Installation software:
. XL PRO

Wiring diagram:

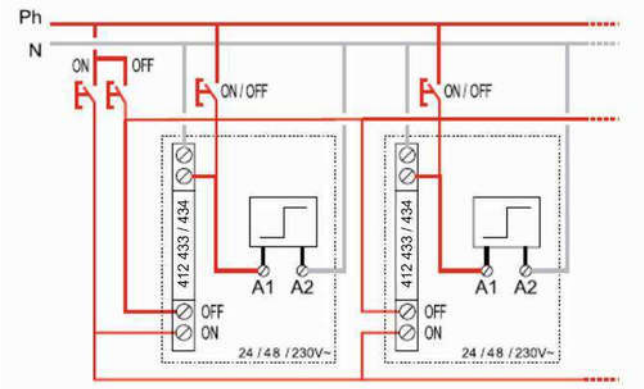

Operating position:
. Vertical, horizontal, flat (all positions)

Mounting:
. On symmetrical rail EN 60.715 or DIN 35 rail via the device to which it is attached

Recommended tools:
. For the terminal screws: insulated or non-insulated screwdriver, Pozidriv no. 1 or with a 4 mm blade.

Connection:
. Terminals protected against direct contact (IP 20 wired device)
. Cage terminals, with disengageable or captive screws
. Terminal depth: 8 mm
. Terminal capacity:
- 1 flexible cable (with or without gland) or rigid cable 2.5 mm² in size

or

- 2 flexible cables (with or without gland) or rigid cables 2.5 mm² in size

. Screw heads: mixed head, slotted head and Pozidriv
. Tightening torques: recommended = 0.8 Nm
min. = 0.4mN / max. = 1.2 Nm

Maximum lenght of control lines :

	24V	48V	230V
On	10 km	10 km	1 km
Off	10 km	10 km	1 km
Local control	10 km	6 km	300 m

Degree of protection:
. Terminal protection class against direct contact: IP2x (wired device) in accordance with standards IEC 529, EN 60529 and NF C 20-010
. Front panel protection class against direct contact: IP3XD
. Class II, front panel with faceplate
. Protection class against mechanical impact IK04 in accordance with standards NF EN 50-102/NF C 20-015 (June 1995)

Resistance to tremors:
. No change in contact status in the "resistance to tremors" test.

5. GENERAL CHARACTERISTICS

Rated operating voltage:
. Ue = 24 V~, 48V~ or 230V~ depending on the catalogue number

Maximum operating voltage:
. 50 V~ 50/60 Hz for catalogue number 4 124 33

. 250 V~ 50/60 Hz for catalogue number 4 124 34

Marking:
. Front panel by indelible pad printing



. Side by laser marking

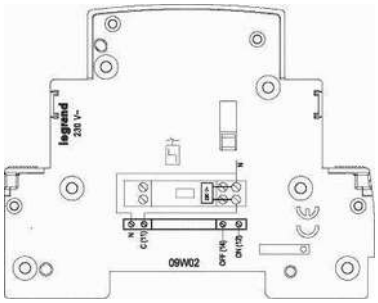

Isolation distance (distance between the contacts):
. 2.5 mm

Dielectric strength:
. 2000 V

Rated impulse withstand voltage:
. U imp = 4 kV

Rated operating frequency:
. 50/60 Hz

Centralised control auxiliary for pulse operated latching relay

Catalogue number(s): 4 124 33 / 4 124 34

5. GENERAL CHARACTERISTICS (continued)

Average weight per device:
. 0.050 kg

Volume and packaging:
. Packaged volume: 2 dm^3
. Unit packaging

Enclosure material:
. Polyamide

Plastic material characteristics:
. Resistance to incandescent wire for 30 seconds at 960°C in accordance with IEC 695-2-1
. Self-extinguishing in accordance with UL94 V0/V1

Sinusoidal vibration resistance (in accordance with IEC 68.2.6):
. Axis: x, y, z
. Frequency: 10 to 55 Hz for 30 minutes
. Acceleration: 3 g (1 g = 9.81 $m.s^{-2}$)

Mechanical endurance:
. 100,000 operations in accordance with EN 60669-2-2

Impact of height:
. No impact up to 4,000 m

6. COMPLIANCE AND APPROVALS

Classification in accordance with Appendix Q: (standard IEC/EN 60947-1)

. Category F

Inter alia: temperature test range -25°C/+70°C, vibration test 2 Hz to 13.2 Hz with ±1 mm movement, 13.2 Hz to 100 Hz acceleration ±0.7 g, salt spray in accordance with IEC 60068-2-52

Respect for the environment – Compliance with European Union Directives:

. Compliance with Directive 2002/95/EC of 27/01/03 known as "RoHS" which provides for a restriction on the use of dangerous substances such as lead, mercury, cadmium, hexavalent chromium and polybrominated biphenyl (PBB) and polybrominated diphenyl ether (PBDE) brominated flame retardants from 1st July 2006
. Compliance with the Directive 91/338/EEC of 18/06/91 and decree 94-647 of 27/07/04

Plastic materials:

. Zero halogen plastic materials.
. Labelling of parts compliant with ISO 11469 and ISO 1043.

Packaging:

. Design and manufacture of packaging compliant with decree 98-638 of 20/07/98 and Directive 94/62/EC

7. SPECIFIC EXAMPLE OF WIRING :

Control and analog time switch and timed relay :
. Analog time switch cat. 4 128 23
. Timed relay cat. 0 047 45

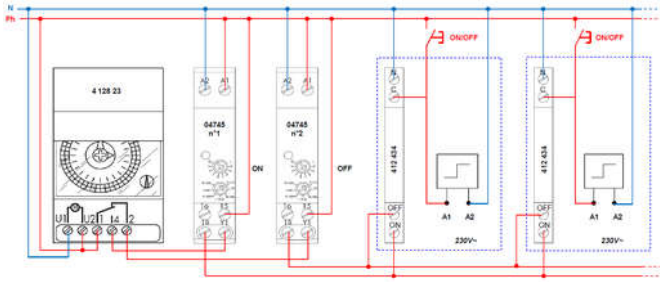

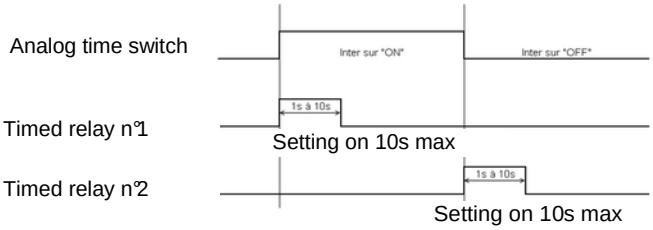

Control by digital time switch :
. digital time switch cat. 4 126 41

