

Model Number

NCB50-FP-A2-P1-V1

Features

- **50 mm flush**
- **4-wire DC**

Connection

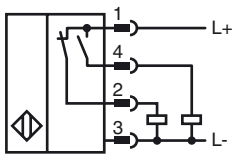

Pinout

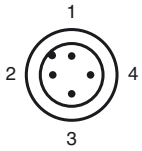

Wire colors in accordance with EN 60947-5-2

1	BN	(brown)
2	WH	(white)
3	BU	(blue)
4	BK	(black)

Accessories

V1-G
Female connector, M12, 4-pin, field attachable

V1-W-2M-PUR
Female cordset, M12, 4-pin, PUR cable

V1-G-2M-PUR
Female cordset, M12, 4-pin, PUR cable

V1-W
Female connector, M12, 4-pin, field attachable

Dimensions

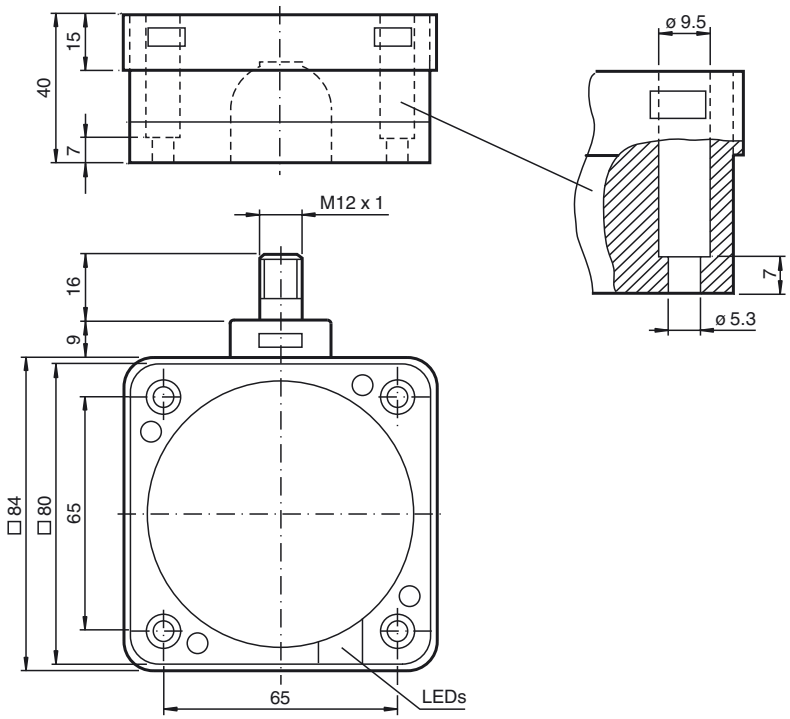

Technical Data

General specifications		
Switching element function		PNP NO/NC
Rated operating distance	s_n	50 mm
Installation		flush
Output polarity		DC
Assured operating distance	s_a	0 ... 40.5 mm
Reduction factor r_{Al}		0.38
Reduction factor r_{Cu}		0.35
Reduction factor r_{304}		0.83
Nominal ratings		
Operating voltage	U_B	10 ... 60 V DC
Switching frequency	f	0 ... 80 Hz
Hysteresis	H	typ. 3 %
Reverse polarity protection		reverse polarity protected
Short-circuit protection		pulsing
Voltage drop	U_d	≤ 3 V
Operating current	I_L	0 ... 200 mA
Off-state current	I_r	0 ... 0.5 mA
No-load supply current	I_0	≤ 20 mA
Time delay before availability	t_v	≤ 300 ms
Operating voltage display		LED, green
Switching state indication		LED, yellow
Functional safety related parameters		
$MTTF_d$		680 a
Mission Time (T_M)		20 a
Diagnostic Coverage (DC)		0 %
Ambient conditions		
Ambient temperature		-25 ... 70 °C (-13 ... 158 °F)
Mechanical specifications		
Connection type		Connector M12 x 1 , 4-pin
Housing material		PBT
Sensing face		PBT
Housing base		PBT
Protection degree		IP68
Compliance with standards and directives		
Standard conformity		
Standards		EN 60947-5-2:2007 IEC 60947-5-2:2007
Approvals and certificates		
UL approval		cULus Listed, General Purpose
CSA approval		cCSAus Listed, General Purpose

Release date: 2013-04-05 09:53 Date of issue: 2013-04-05 187487_eng.xml

Subject to modifications without notice
Copyright Pepperl+Fuchs

Installation hint

These sensors are especially designed for embeddable mounting in conveyor floors. Due to its precise location in metal base plates the sensor is afforded a high degree of mechanical protection. No clearance is required between the sensor and the base plate, avoiding the need for protective guarding to prevent possible foot injury.

The large sensing range ensures positive detection, and thus provides consistent control and monitoring of the conveyor.

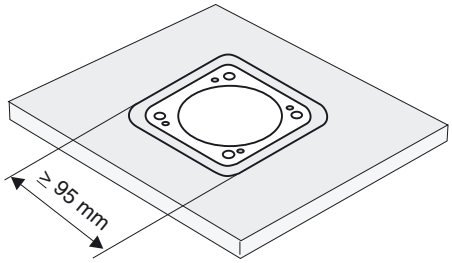

Warning!
Once the metal screening has been removed, the sensor can no longer be embeddable mounted.

Release date: 2013-04-05 09:53 Date of issue: 2013-04-05 187487_eng.xml

Subject to modifications without notice
Copyright Pepperl+Fuchs
Pepperl+Fuchs Group www.pepperl-fuchs.com
USA: +1 330 486 0001 fa-info@us.pepperl-fuchs.com
Germany: +49 621 776-4411 fa-info@pepperl-fuchs.com
Singapore: +65 6779 9091 fa-info@sg.pepperl-fuchs.com
PEPPERL+FUCHS
SENSING YOUR NEEDS