Field-Attachable Connectors

BKS-S 33M-00
Ordercode: BCC00UP

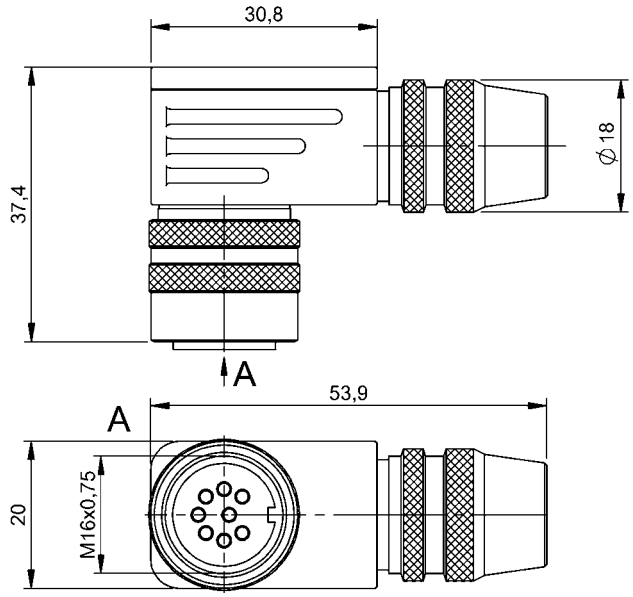

Electrical connection

Cable diameter D	6…8 mm
Connection	M16x0.75-Female, angled, 8-pole
Contact shield	Shield ring
Number of connectable contacts	8
System	Can be fabricated

Electrical data

Operating voltage Ub	60 VDC / 60 VAC
Rated current (40 °C)	5.0 A

Environmental conditions

Ambient temperature	-40…95 °C
Protection degree	IP67

General data

Approval/Conformity	EAC WEEE

Material

Material contact carrier	PBT
Material contacts	Bronze
Material cover nut	Brass
Material grip	Die-cast zinc

Mechanical data

Connection cross-section	0.14…0.75 mm²
Type of wire mounting	Solder connections

Remarks

Enclosure rating per IEC 60529, only in screwed state with the associated mating piece.

Connector view

