Product data sheet
Characteristics

XCRT315
limit switch XCRT - polyester enclosure stainless steel roller with lever - 2C/O



Main

Range of product	OsiSense XC
Series name	Special format
Product or component type	Limit switch
Product specific application	For conveyor belt shift monitoring
Device short name	XCRT
Sensor design	-
Body type	Fixed
Head type	Rotary head
Material	Polyester
Fixing mode	By the body
Movement of operating head	Rotary
Type of operator	Spring return roller stainless steel with lever
Type of approach	Lateral approach, 2 directions
Electrical connection	Screw-clamp terminals, clamping capacity: 1 x 0.5...2 x 2.5 mm²
Number of poles	2
Contacts type and composition	2 C/O
Contact operation	Snap action
Contact block per direction [control circuit]	2 per direction
Positive opening	Without

Complementary

Body material	Polyester
Switch actuation	By conveyor belt
Cable entry	1 entry tapped for Pg 13.5 cable gland, cable outer diameter: 9…12 mm conforming to NF C 68-300
Contacts insulation form	Za
Number of steps	2

Disclaimer: This documentation is not intended as a substitute for and is not to be used for determining suitability or reliability of these products for specific user applications

Minimum torque for tripping	1 N.m
Minimum actuation speed	0.01 m/min
Tripping angle	10 ° for fault signalling 18 ° for stopping of the conveyor belt
Maximum displacement angle	-70 ° 70 °
Contact code designation	A300, AC-15 (Ue = 240 V), Ie = 3 A conforming to EN/IEC 60947-5-1 appendix A Q300, DC-13 (Ue = 250 V), Ie = 0.27 A conforming to EN/IEC 60947-5-1 appendix A
[Ui] rated insulation voltage	300 V conforming to UL 508 500 V (pollution degree 3) conforming to IEC 60947-1 500 V (pollution degree 3) conforming to VDE 0110 300 V conforming to CSA C22.2 No 14
Maximum resistance across terminals	25 MOhm conforming to IEC 60255-7 category 3
[Uimp] rated impulse withstand voltage	6 kV IEC 60664 6 kV IEC 60947-1
Short-circuit protection	10 A cartridge fuse, type gG
Electrical durability	5000000 cycles, DC-13, inductive load type, 120 V, 4 W, operating rate <60 cyc/mn, load factor: 0.5 conforming to IEC 60947-5-1 appendix C 5000000 cycles, DC-13, inductive load type, 24 V, 7 W, operating rate <60 cyc/mn, load factor: 0.5 conforming to IEC 60947-5-1 appendix C 5000000 cycles, DC-13, inductive load type, 48 V, 10 W, operating rate <60 cyc/mn, load factor: 0.5 conforming to IEC 60947-5-1 appendix C
Mechanical durability	300000 cycles
Width	85 mm
Height	95 mm
Depth	75 mm
Net weight	1.155 kg
Terminals description ISO n°1	(11-12)NC (13-14)NO

Environment

Shock resistance	30 gn for 18 ms conforming to IEC 60068-2-27
Vibration resistance	9 gn (f= 10…500 Hz) conforming to IEC 60068-2-6
IP degree of protection	IP65 conforming to IEC 60529
Overvoltage category	Class I conforming to IEC 61140 Class I conforming to NF C 20-030
Ambient air temperature for operation	-25…70 °C
Ambient air temperature for storage	-40…70 °C
Protective treatment	TC
Standards	IEC 60204-1 NF C 79-130 IEC 60947-5-1 CSA C22.2 No 14 EN 60204-1 EN 60947-5-1

Offer Sustainability

Sustainable offer status	Green Premium product
REACh Regulation	REACh Declaration
EU RoHS Directive	Pro-active compliance (Product out of EU RoHS legal scope) EU RoHS Declaration
Mercury free	Yes
RoHS exemption information	Yes
Environmental Disclosure	Product Environmental Profile
Circularity Profile	No need of specific recycling operations

Contractual warranty

Warranty	18 months

Dimensions

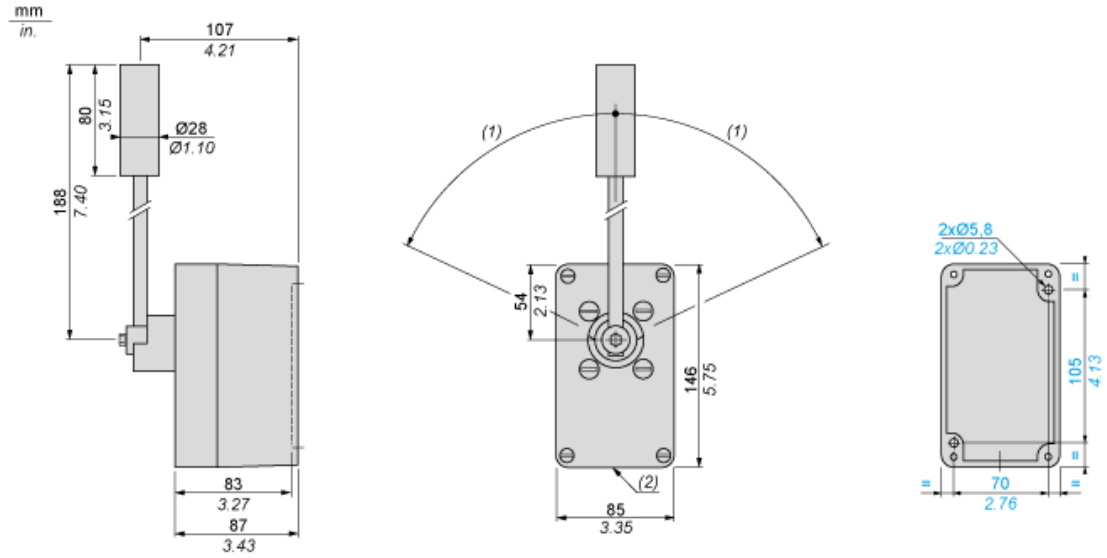

(1) 70° max.
(2) 1 plain entry for Pg 13.5 cable gland

Wiring Diagram

2 Single-pole CO Snap Action

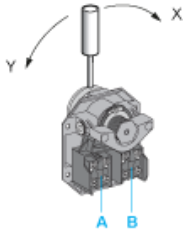

(A) 1st contact
(B) 2nd contact

2 Single-pole CO Snap Action

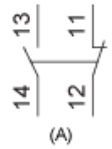

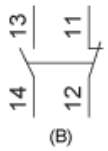

(A) 1st contact
(B) 2nd contact

Functionnal Diagram

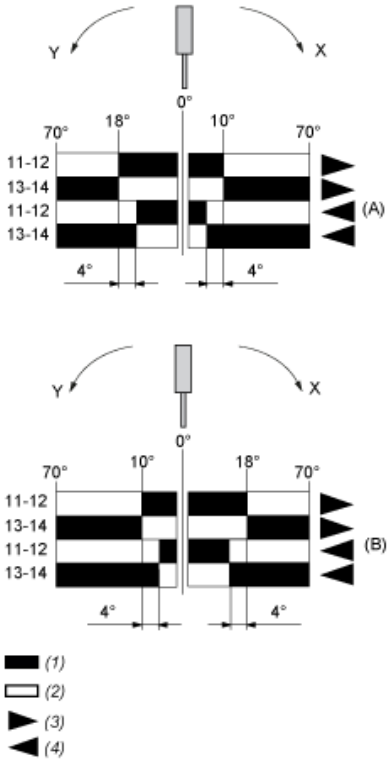

(A) 1st contact
(B) 2nd contact
(1) Closed
(2) Open
(3) Tripping
(4) Resetting