# E40080

## T-piece with progressive ring fitting

T-PIECE QL28-18-28/VA

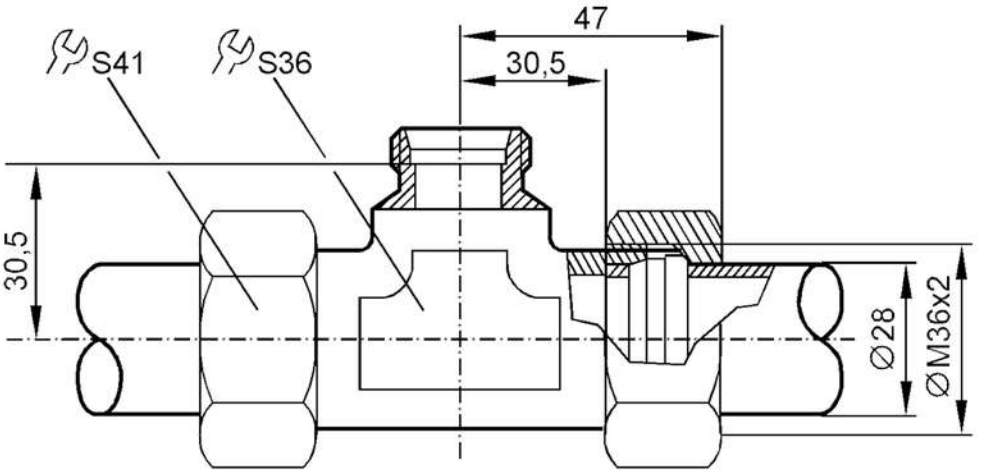


| | | |
|---|---|---|
| **Application** | | |
| Design | | for sensors and adapters with process connection M26x1,5 |
| Application | | for industrial applications |
| Media | | liquids and gases |
| Pressure rating | [bar] | 160 |
| **Tests / approvals** | | |
| Pressure Equipment Directive | | A possible classification to PED depends on the application and has to be carried out by the user / operator. |
| Pressure Equipment Directive EAC | | The adapter is intended for use in devices, machines and installations that do not fall under the categories of the technical rule TR CU 032/2013. |
| Safety instructions | | The compatibility between medium and product material has to be checked in all applications. |
| **Mechanical data** | | |
| Weight | [g] | 569.8 |
| Type of mounting | | Recommendation: precision steel pipes 28 x 1,5 DIN 2391/ISO 3304 |
| Materials | | stainless steel (1.4571/316Ti ) |
| Sensor connection | | M26 x 1,5 |
| Process connection | | Ø 28 mm |
| **Accessories** | | |
| Accessories (optional) | | Adapter: 1 x M18 x 1,5, for direct connection of flow sensors, E40104 |
| **Remarks** | | |
| Remarks | | Use a lubricating paste which is suitable and approved for the application |
| | | Observe the notes on the installation of progressive ring fittings |
| Pack quantity | | 1 pcs. |