THE INFORMATION CONTAINED IN THIS DRAWING IS THE SOLE PROPERTY OF L-COM, INC. ANY REPRODUCTION IN PART OR WHOLE WITHOUT THE WRITTEN PERMISSION OF L-COM, INC. IS PROHIBITED.

REVISIONS			
REV	DESCRIPTION	DATE	APPROVED
A	DRAWING REPLACES SDF1-OD1	10/20/14	D. CASTRO
B	ECN 8946: 5.8±0.3 WAS 5.69, 2.1±0.3 WAS 2.01, TIN WAS CHROMATED	10/2/2017	R.CLARK

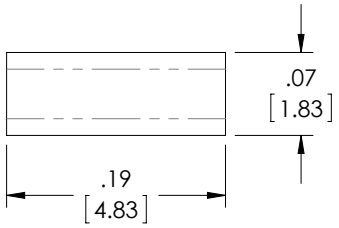

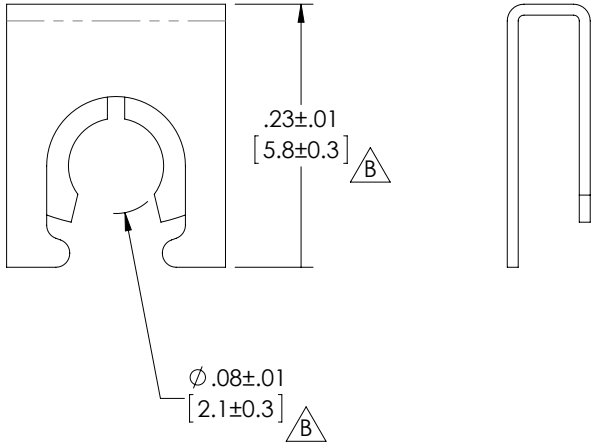

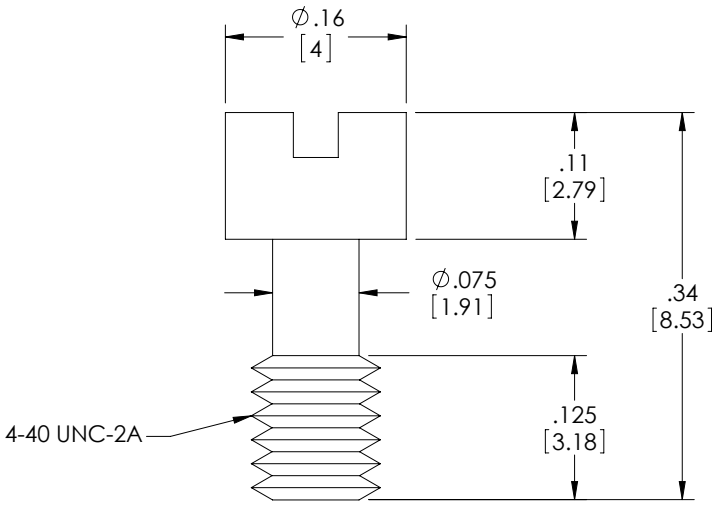

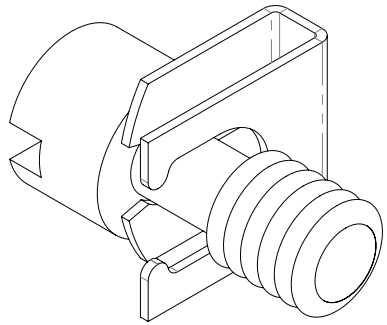

NOTES:

1. **MATERIALS:**
   SCREW: BRASS,
   RETAINER: STEEL

   FINISH:
   SCREW: NICKEL
   RETAINER: TIN

2. FITS ALL D-SUBMINIATURE CONNECTORS HAVING METAL FLANGES.

3. ALL DIMENSIONS ARE FOR REFERENCE.

4. COMPONENTS ARE PACKAGED WITH 50 SCREWS AND 50 RETAINERS PER BAG IN ACCORDANCE WITH L-COM SPEC PS-0031.

REGULATORY COMPLIANCE:
CE2011/65/EU(RoHS DIRECTIVE)

UNLESS OTHERWISE SPECIFIED,
DIMENSIONS ARE IN INCHES [mm]
OVERALL CABLE LENGTH TOLERANCE:
≤12 [305] = +1 [25] / -0
>12 [305] ≤60 [1524] = +2 [51] / -0
>60 [1524] ≤120 [3048] = +4 [102] / -0
>120 [3048] ≤300 [7620] = +6 [152] / -0
>300 [7620] = +5% / -0%
ALL OTHER DIMENSIONAL TOLERANCES:
.X = ± .2 [5.08]
.XX = ± .02 [.51]
.XXX = ±.005 [.13]
PROJECTION

APPROVALS	DATE
DRAWN BY T.CLARK	11/05/2001
CHECKED BY D.PARHAM	11/05/2001
APPROVED BY C.McCORMICK	11/05/2001

CONFIGURATION DETAILS OF UNDIMENSIONED FEATURES MAY VARY

COLOR VARIATIONS MAY OCCUR

L-COM Global Connectivity
50 HIGH STREET
NORTH ANDOVER, MA
01845

CATEGORY
D-SUBMINIATURE

PRODUCT DESCRIPTION
4-40 JACKSCREWS WITH RETAINING CLIP

SIZE	FSCM NO.	DWG. NO.	REV.
A	43321	SDF1	B

SCALE: NONE | CAD FILE: SDF1.SLDDRW | SHEET 1 OF 1