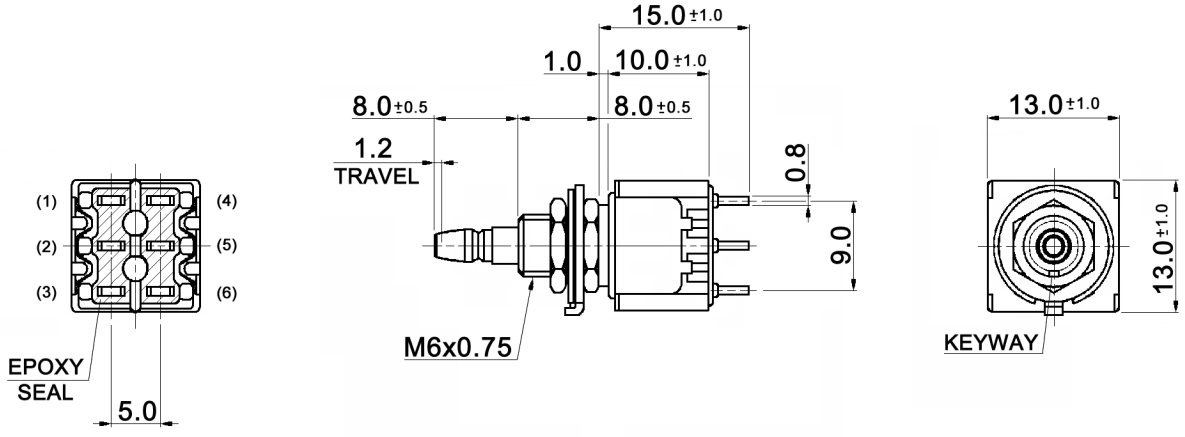

x	Contacts / terminals	Rating	Bushing material
empty	copper alloy, silver plated over nickel	3A, 125V AC	zinc, nickel plated
B	copper alloy, 2µm gold plated over 3µm nickel	min.: 1µA, 20mV DC max.: 25mA, 20V DC	brass, nickel plated

CIRCUIT DIAGRAM

Type	Circuit arrangement	
		
MPS 203 Rx	(ON) 3-1 6-4	ON 3-2 6-5

TERMINAL DETAIL

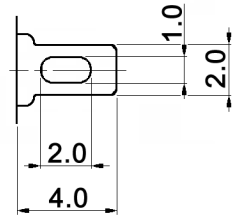

Specifications:

Contact resistance:	10mOhm max. at 1.5mA, 200µV AC (1kHz)
Insulation resistance:	1000MOhm min. at 500V DC
Dielectric strength:	1000V AC for 1 minute
Mechanical life:	100 000 cycles
Electrical life:	25 000 cycles
Operating force:	3 +/-1N (306 +/-102gf)
Material:	Locating ring: steel, zinc plated
	Tooth washer: carbon tool steel, zinc plated
	Hex nut: steel, nickel plated
	Plunger: brass, nickel plated
	Frame: stainless steel
	Case: diallyl phthalate resin, black

RoHS-conform 2002/95/EC

Tolerances: ±0.2mm			Date	Name	MPS 203 Rx	
			02/11	dr		
Materials	05/12	dr	knitter-switch		30 23 07	Page 1/1
Modifications	Date	Name				