# Product data sheet
## Characteristics

# XMLB010C2S11
## pressure switch XMLB 10 bar - adjustable scale 2 thresholds - 1 C/O



## Main

| | |
|---|---|
| Range of product | OsiSense XM |
| Product or component type | Electromechanical pressure sensor |
| Pressure sensor type | Electromechanical pressure sensor |
| Device short name | XMLB |
| Pressure sensor size | 10 bar |
| Controlled fluid | Corrosive fluid (0...160 °C) |
| Fluid connection type | G 1/4 (female) conforming to ISO 228 |
| Electrical connection | Screw-clamps terminals 1 x 0.5...2 x 2.5 mm² |
| AWG gauge | AWG 20...AWG 14 |
| Cable entry number | 1 tapped entry (Pg 13.5) forcable gland , cable outer diameter: 9...13 mm |
| Contacts type and composition | 1 C/O |
| Product specific application | - |
| Pressure switch type of operation | Regulation between 2 thresholds |
| Electrical circuit type | Control circuit |
| Scale type | Adjustable differential |
| Local display | With |
| Adjustable range of switching point on rising pressure | 0.7...10 bar |
| Adjustable range of switching point on falling pressure | 0.13...9.15 bar |
| Possible differential maximum at high setting | 7.5 bar |
| Maximum permissible accidental pressure | 22.5 bar |
| Destruction pressure | 45 bar |
| Pressure actuator | Diaphragm |
| Materials in contact with fluid | PTFE<br>316L stainless steel |
| Enclosure material | Zinc alloy |
| [In] rated current | 3 A, B300, AC-15 (Ue = 120 V) conforming to EN/IEC 60947-5-1<br>1.5 A, B300, AC-15 (Ue = 240 V) conforming to EN/IEC 60947-5-1<br>0.1 A, R300, DC-13 (Ue = 250 V) conforming to EN/IEC 60947-5-1 |

## Complementary

| | |
|---|---|
| Possible differential minimum at low setting | 0.57 bar (+/- 0.05 bar) |
| Possible differential minimum at high setting | 0.85 bar (- 0.1 bar, + 0.15 bar) |
| Maximum permissible pressure - per cycle | 12.5 bar |
| Terminal block type | 4 terminals |
| Operating rate | <= 120 cyc/mn at > 0 °C |
| Repeat accuracy | < 2 % |

The information provided in this documentation contains general descriptions and/or technical characteristics of the performance of the products contained herein.
This documentation is not intended as a substitute for and is not to be used for determining suitability or reliability of these products for specific user applications.
It is the duty of any such user or integrator to perform the appropriate and complete risk analysis, evaluation and testing of the products with respect to the relevant specific application or use thereof.
Neither Schneider Electric Industries SAS nor any of its affiliates or subsidiaries shall be responsible or liable for misuse of the information contained herein.

| | |
|---|---|
| [Ui] rated insulation voltage | 300 V conforming to UL 508<br>500 V conforming to EN/IEC 60947-1<br>300 V conforming to CSA C22.2 No 14 |
| [Uimp] rated impulse withstand voltage | 6 kV conforming to EN/IEC 60947-1 |
| Auxiliary contacts operation | Snap action |
| Contacts material | Silver contacts |
| Resistance across terminals | < 25 mOhm conforming to IEC 255-7 category 3<br>< 25 mOhm conforming to NF C 93-050 method A |
| Short circuit protection | 10 A cartridge fuse type gG (gl) |
| Mechanical durability | 5000000 cycles |
| Setting | External |
| Height | 113 mm |
| Depth | 75 mm |
| Width | 35 mm |
| Product weight | 0.705 kg |

## Environment

| | |
|---|---|
| Standards | CE<br>EN/IEC 60947-5-1<br>UL 508<br>CSA C22.2 No 14 |
| Product certifications | BV<br>CCC<br>CSA<br>LROS (Lloyds register of shipping)<br>UL<br>EAC |
| Protective treatment | TC (standard version) |
| Ambient air temperature for operation | -25...70 °C |
| Ambient air temperature for storage | -40...70 °C |
| Operating position | Any position |
| Vibration resistance | 4 gn (f = 30...500 Hz) conforming to IEC 60068-2-6 |
| Shock resistance | 50 gn conforming to IEC 60068-2-27 |
| Class of protection against electric shock | Class I conforming to IEC 1140<br>Class I conforming to IEC 536<br>Class I conforming to NF C 20-030 |
| IP degree of protection | IP66 conforming to EN/IEC 60529 |

## Offer Sustainability

| | |
|---|---|
| Sustainable offer status | Green Premium product |
| RoHS (date code: YYWW) | Compliant - since 0928 - Schneider Electric declaration of conformity |
| REACh | Reference not containing SVHC above the threshold |
| Product end of life instructions | Need no specific recycling operations |

## Dimensions

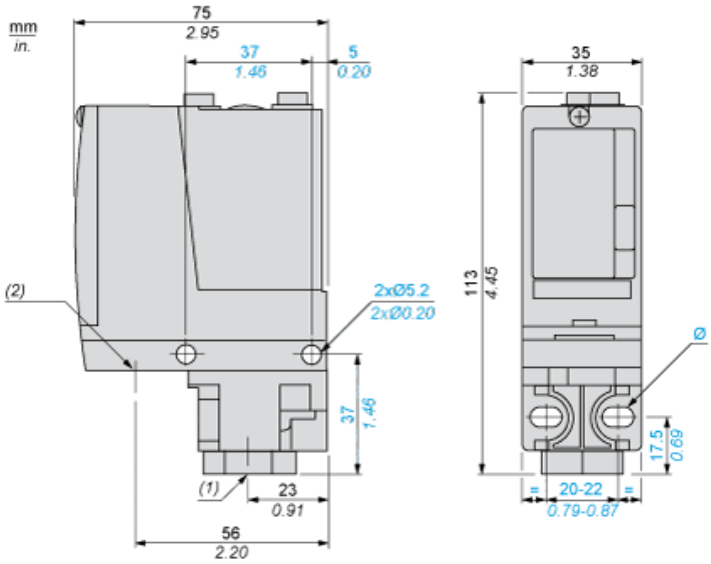


(1) 1 fluid entry, tapped G1/4 (BSP female)
(2) 1 electrical connections entry, tapped Pg 13.5
Ø : 2 elongated holes Ø 5.2 x 6.7

## Wiring Diagram

### Terminal Model

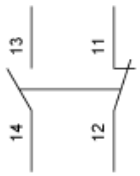

## Operating Curves

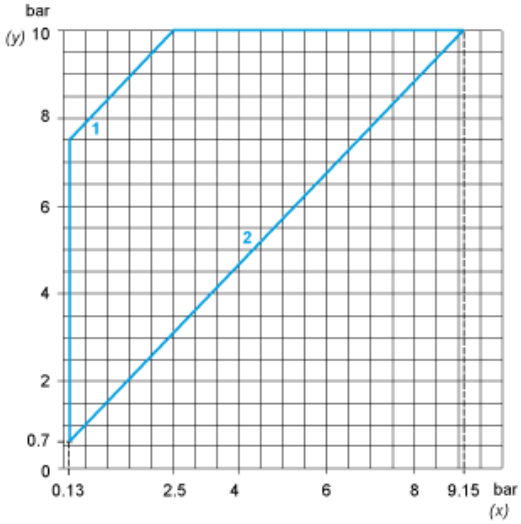


(y) Rising pressure
(x) Falling pressure
1 : Maximum differential
2 : Minimum differential

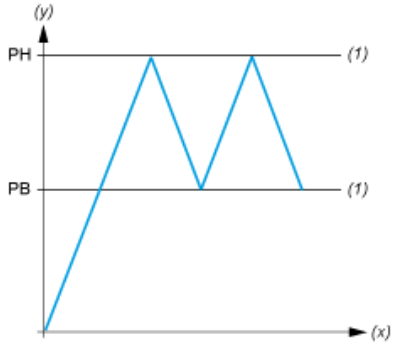


(y) Pressure
(x) Time
(1) Adjustable value
PH : High point
PB : Below point