# PA3026

## Pressure transmitter with ceramic measuring cell

PA-2,5-RBR14-A-ZVG/US/ /V

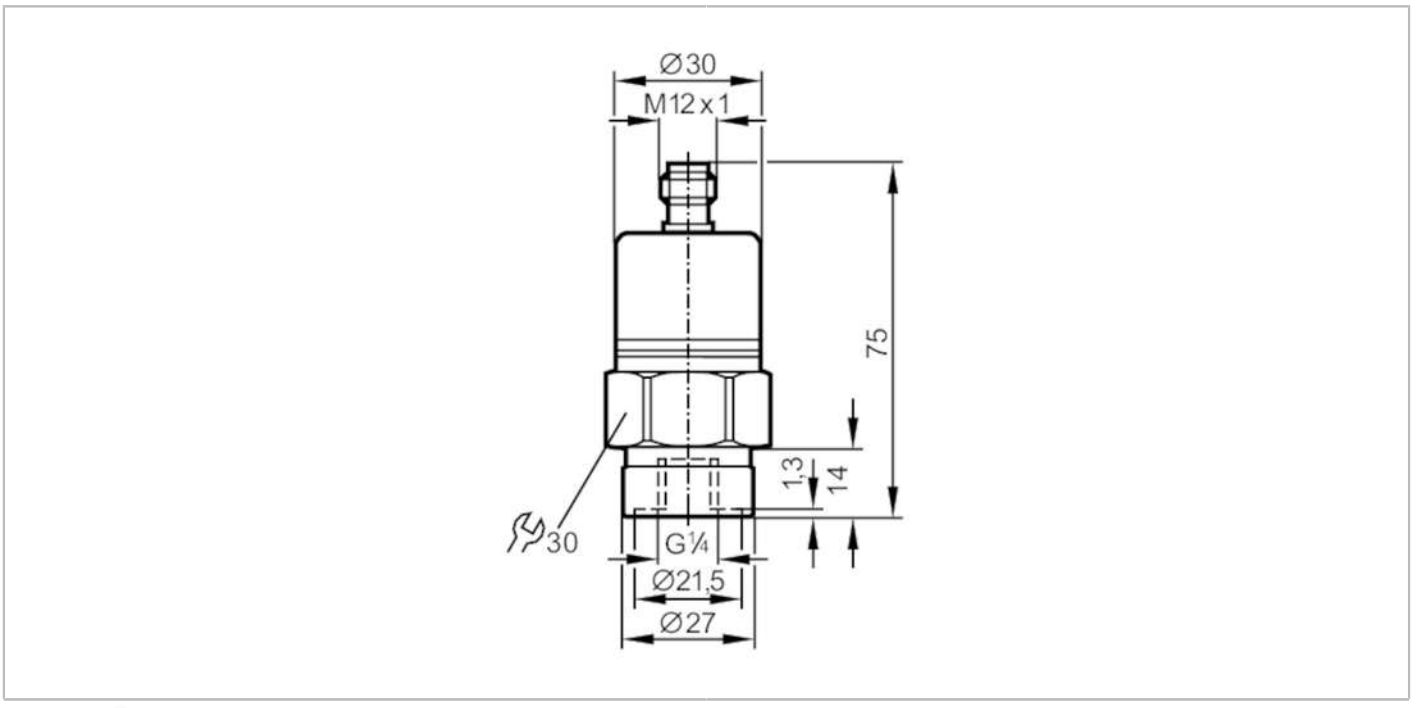


| | | | | |
|---|---|---|---|---|
| **Product characteristics** | | | | |
| Number of inputs and outputs | Number of analogue outputs: 1 | | | |
| Measuring range | 0...2.5 bar | 0...2500 mbar | 0...36 psi | 0...250 kPa |
| Process connection | threaded connection G 1/4 internal thread | | | |
| **Application** | | | | |
| Special feature | Gold-plated contacts | | | |
| Application | for industrial applications | | | |
| Media | liquids and gases | | | |
| Medium temperature [°C] | -25...90; (on request: -40...90 °C) | | | |
| Min. bursting pressure | 50 bar | 725 psi | 5 MPa | |
| Pressure rating | 20 bar | 290 psi | 2 MPa | |
| Type of pressure | relative pressure | | | |
| **Electrical data** | | | | |
| Operating voltage [V] | 9.6...32 DC | | | |
| Min. insulation resistance [MΩ] | 100; (500 V DC) | | | |
| Protection class | III | | | |
| Reverse polarity protection | yes | | | |
| **Inputs / outputs** | | | | |
| Number of inputs and outputs | Number of analogue outputs: 1 | | | |
| **Outputs** | | | | |
| Total number of outputs | 1 | | | |
| Output signal | analogue signal | | | |
| Number of analogue outputs | 1 | | | |
| Analogue current output [mA] | 4...20 | | | |

# PA3026

## Pressure transmitter with ceramic measuring cell

PA-2,5-RBR14-A-ZVG/US/ /V

| | | | | | |
|---|---|---|---|---|---|
| Max. load | [Ω] | 720; (Ub = 24 V; (Ub - 9,6 V) / 20 mA) | | | |
| Overload protection | | yes | | | |
| **Measuring/setting range** | | | | | |
| Measuring range | | 0...2.5 bar | 0...2500 mbar | 0...36 psi | 0...250 kPa |
| **Accuracy / deviations** | | | | | |
| Repeatability | [% of the span] | < 0,1; (with temperature fluctuations < 10 K) | | | |
| Characteristics deviation | [% of the span] | < ± 0,25 (BFSL) / < ± 0,5 (LS); (BFSL = Best Fit Straight Line; LS = limit value setting) | | | |
| Long-term stability | [% of the span] | < ± 0,05; (per 6 months) | | | |
| Temperature coefficient zero point | [% of the span / 10 K] | 0,1; (0...80 °C) | | | |
| Temperature coefficient span | [% of the span / 10 K] | 0,2; (0...80 °C) | | | |
| **Response times** | | | | | |
| Step response time analogue output | [ms] | 3 | | | |
| **Operating conditions** | | | | | |
| Ambient temperature | [°C] | -25...80 | | | |
| Storage temperature | [°C] | -40...100 | | | |
| Protection | | IP 65 | | | |
| **Tests / approvals** | | | | | |
| EMC | | EN 61000-4-2 ESD | 4 kV CD / 8 kV AD | | |
| | | EN 61000-4-3 HF radiated | 30 V/m | | |
| | | EN 61000-4-4 Burst | 2 kV | | |
| | | EN 61000-4-6 HF conducted | 10 V | | |
| | | radiation of interference | according to the automotive directive 2004/104/EC | | |
| | | CISPR 25 | | | |
| | | immunity | according to the automotive directive 2004/104/EC | | |
| | | ISO 11452-2 HF radiated | 100 V/m | | |
| | | ISO 7637-2 pulse | severity level 4 | | |
| Shock resistance | | DIN EN 60068-2-27 | 50 g (11 ms) | | |
| | | DIN EN 61373 | category 3 | | |
| Vibration resistance | | DIN EN 60068-2-6 | 20 g (10...2000 Hz) | | |
| | | DIN EN 61373 | category 2 | | |
| MTTF | [years] | 506 | | | |
| Pressure Equipment Directive | | Sound engineering practice; can be used for group 2 fluids; group 1 fluids on request | | | |
| Railway applications | | DIN EN 50155 / IEC 60571 | Klasse T3, C1, S1 | | |
| **Mechanical data** | | | | | |
| Weight | [g] | 222.5 | | | |
| Housing | | cylindrical | | | |
| Dimensions | [mm] | Ø 30 / L = 75 | | | |
| Materials | | stainless steel (316L/1.4404); FKM; PA; EPDM/X | | | |
| Materials (wetted parts) | | stainless steel (303/1.4305); ceramics; FKM | | | |

# PA3026

## Pressure transmitter with ceramic measuring cell

PA-2,5-RBR14-A-ZVG/US/ /V

| | |
|---|---|
| Min. pressure cycles | 100 million |
| Process connection | threaded connection G 1/4 internal thread |
| Restrictor element integrated | no (can be retrofitted) |

### Remarks

| | |
|---|---|
| Pack quantity | 1 pcs. |

### Electrical connection

Connector: 1 x M12; coding: A; Contacts: gold-plated




Connection

