E20078

Fibre optic diffuse reflection sensor

FT-00-M-E3

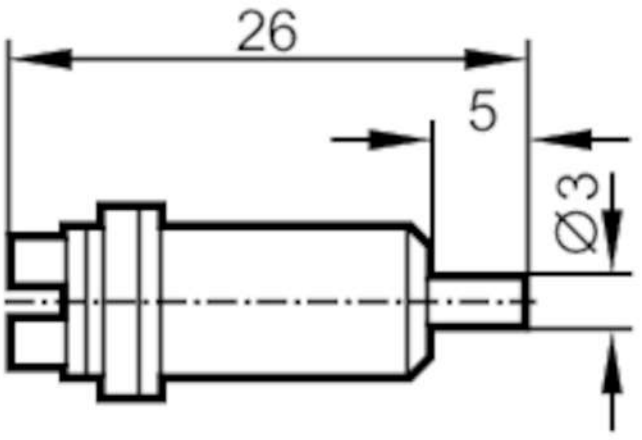

Application		
Function principle		Diffuse reflection sensor
Application		For use in industrial environments
Detection zone		
Range with fibre optic amplifier type		OCF; OKF; OUF
OCF (High Power)		
Range fibre optics	[mm]	360
OKF		
Range fibre optics	[mm]	40
OUF		
Range fibre optics	[mm]	40
Operating conditions		
Ambient temperature	[°C]	-20...80
Mechanical data		
Weight	[g]	12.5
Version of sensing head		straight
Sensing head diameter	[mm]	3
Total length	[mm]	26
Fibre arrangement		◐

E20078

Fibre optic diffuse reflection sensor

FT-00-M-E3

Fibre material	glass
Fibre head material	brass
Remarks	
Pack quantity	1 pcs.