

AK 2 S schwarz/black

Measuring and Testing Equipment:Alligator clips:4 mm system

Product description	
Description	Insulated, unbreakable crocodile clip. Clamping range up to 9.5 mm bolt diameter. The flat part of the jaws (fine wire section) allows even the finest wires to be clamped. 4 mm diameter socket connection and screw connection up to 1.5 mm².
Type	AK 2 S schwarz/black
Order No.	932 146-100
System	4 mm system
Clamping range	9.5 mm
Housing Color	black
Other standard types	red color, order no. 932 146-101

Drawing

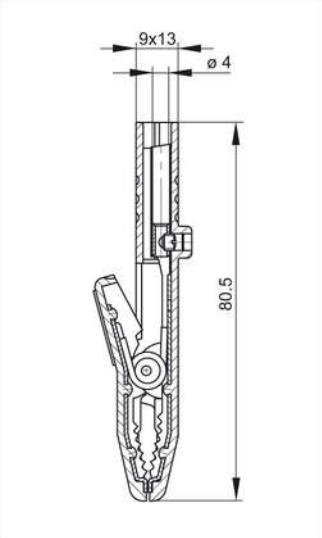

Technical data	
Type of contact	socket
Type of termination	4 mm socket, screw
Rated voltage	DC 60 V
Rated current	25 A
Contact resistance	10 mOhm
Material	
Contact material	brass
Contact surface material	nickel-plated
Housing material	PP
Environmental conditions	
Temperature range	-25 °C to +80 °C
Inflammability class	