ITW Switches

SERIES 48M - 19MM PANEL SEALED METAL ELECTRO-MECHANICAL

Built on the proven series 48 platform these rugged switches come in stainless steel or chrome plated housings with either momentary or maintained action and lighted or unlighted versions. The variety of options in this compact package size make the 48M ideal for many applications.



APPLICATIONS:

- Outdoor Controls
- Security Equipment
- Medical Equipment
- Food Processing Equipment
- Military Equipment
- Industrial Machinery
- Transportation: Mass-Transit, Lift Trucks

KEY FEATURES:

- Momentary or Maintained Action
- Stainless Steel Housing
- Center Spot or Ring Illumination
- Variety of LED colors
- Electro-Mechanical
- Panel Sealed to IP67
- ROHS Compliant
- Gold Plated Contact and Terminals

ORDERING INFORMATION:

Switch Function:

- **A** Mechanical, Momentary, Wire Leads
- **B** Mechanical, Maintained, Wire Leads
- **1** Mechanical, Momentary, Solder Terminal
- **2** Mechanical, Maintained, Solder Terminal
- **5** Mechanical, Momentary, PC Terminal
- **6** Mechanical, Maintained, PC Terminal

Housing Material:

- **1** Stainless Steel

Illumination:

- **0** Non-lit
- **1** Center Spot Illumination
- **2** Ring Illumination
- **3** Illuminated power Symbol

LED Color:

- **N** None
- **G** Green LED
- **R** Red LED
- **A** Amber LED
- **B** Blue LED
- **W** White LED
- **RB** Red/Blue LED
- **RG** Red/Green LED

Voltage Resistor:

If Blank*/$

- **05** 5V Forward

48M - [ ] [ ] [ ] [ ] [ ]

* Current limiting resistor is required to limit LED forward current to 20 mA (not included).
$ Other integrated LED voltages can be provided upon request depending on project volume

Contact an Authorized Distributor or Factory for Pricing

SERIES 48M: 19MM PANEL SEALED METAL PUSHBUTTON

PRODUCT DRAWINGS

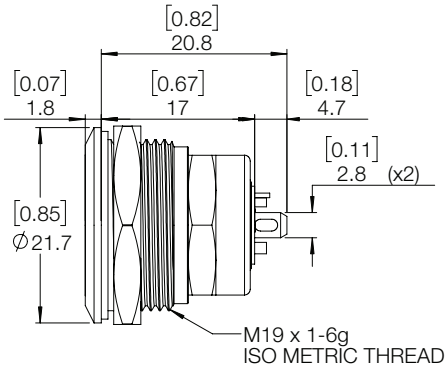

SOLDER TERMINAL SIDE VIEW

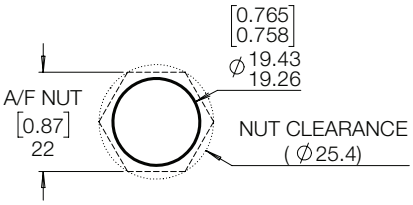

RECOMMENDED PANEL CUT-OUT

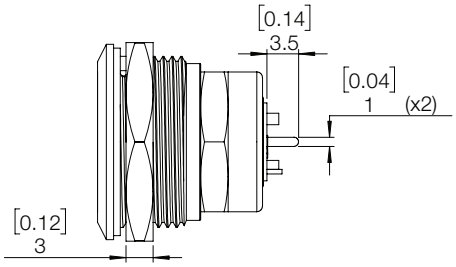

PC TERMINAL SIDE VIEW

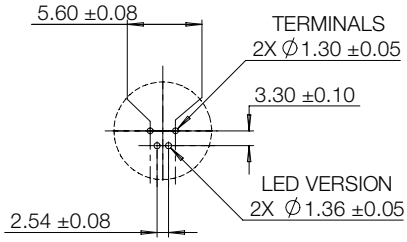

RECOMMENDED PCB LAYOUT

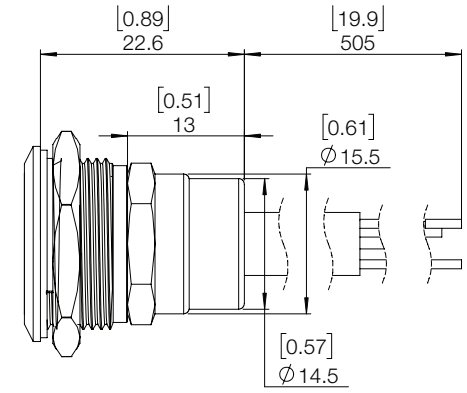

WIRE LEADS SIDE VIEW

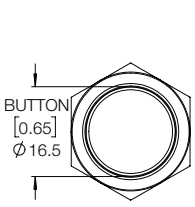

NON ILLUMINATED

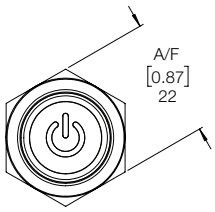

POWER ILLUMINATED

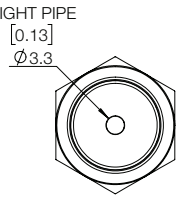

SPOT ILLUMINATION

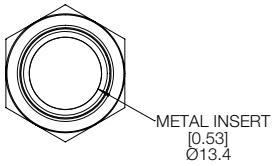

RING ILLUMINATION

MECHANICAL CHARACTERISTICS:

Circuit:
SPST-NO-DB (FORM X)

Button travel (nominal):
[2.3] .09

Operating force (nominal):
[3N] 306g

Panel thickness:
[0.5 to 4.5] .02 to .18

Nut torque (max):
[11.5 kgf/cm] 10 lb/in

Hardware:
Bulk packaged sealing washer and hex nut are included

ENVIRONMENTAL SPECIFICATIONS

Actuator ingress protection:
IP67

Operating temperature:
Non-Lit: [-40°C to +85°C]
-40°F to +185°F

Illuminated: [-25°C to +85°C]
-13°F to +185°F

ELECTRICAL SPECIFICATIONS

Current rating (resistive):
250mA @ 12VDC, 100K Cycles
150mA @ 28VDC, 150K Cycles
(Momentary)

100mA @ 48VDC, 100K Cycles
10mA @ 12VDC, 1 Million Cycles
(Momentary)

Dielectric strength:
1,000 VAC

Insulation resistance:
1GΩ

Contact resistance:
50mΩ

Wire leads:
UL STYLE 1007
26 AWG, Stranded

Copyright © 2024. ITW Switches 09/2024