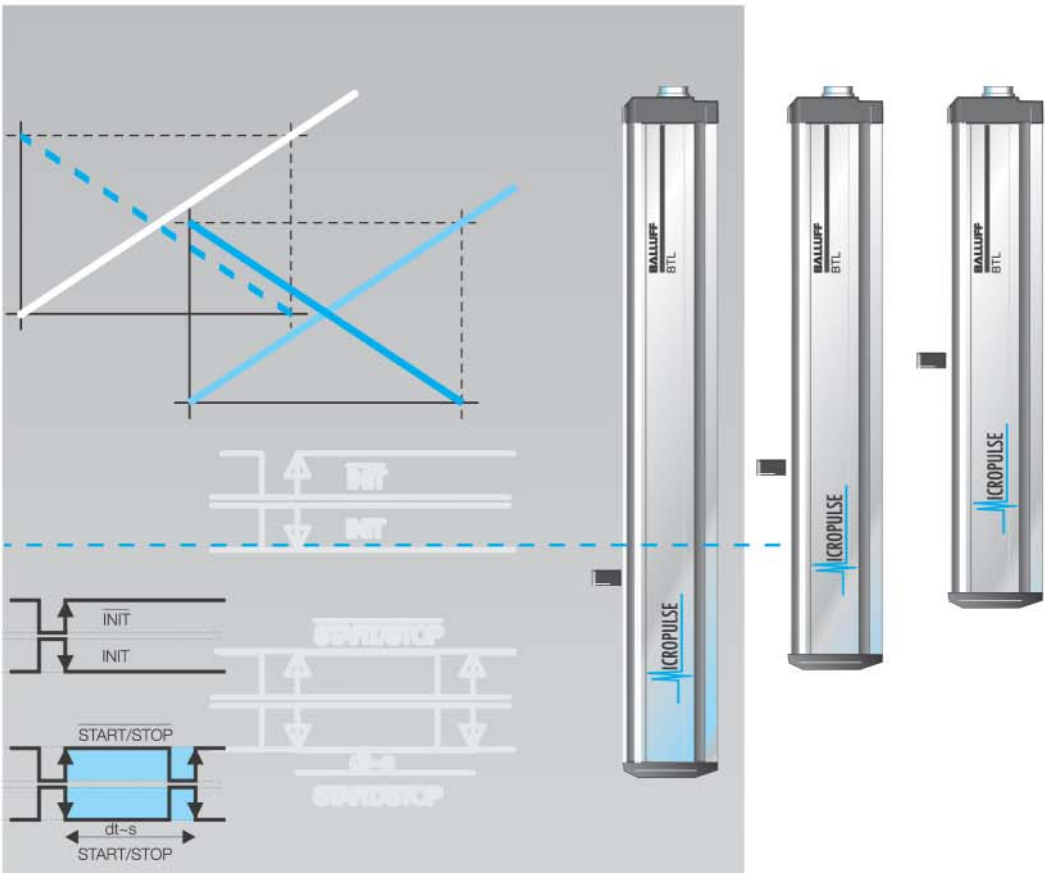

P.2 General data
P.4 Analog interface
P.6 Digital pulse interface
P.8 SSD interface
P.10 CANopen interface
P.12 PROFIBUS-DP interface
P.14 Magnets floating
P.16 Magnets captive, control arm

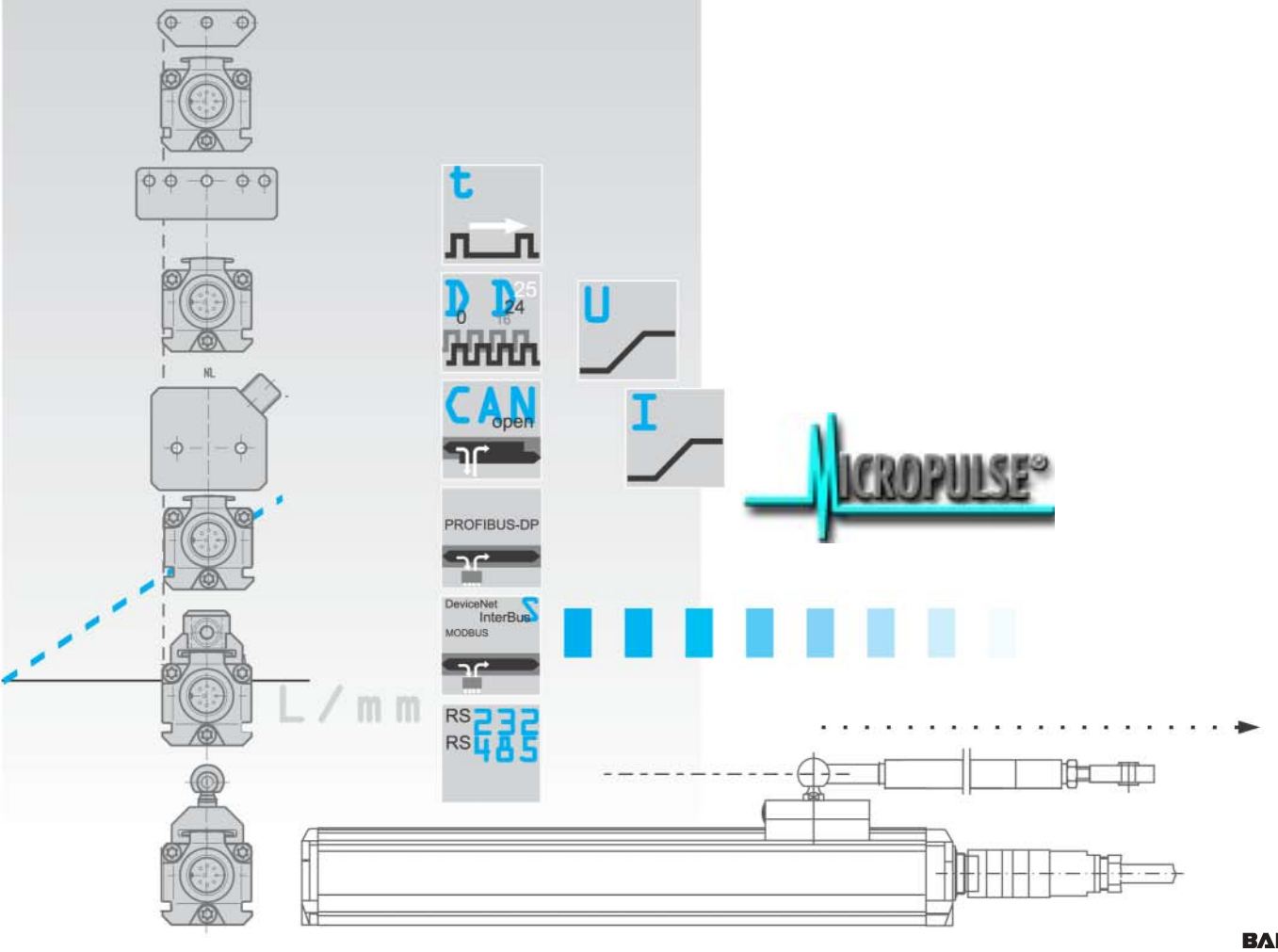

Balluff Micropulse transducers in the Profile housing, with their mechanical design, the high protection rating, and their ease of installation, are an alternative to linear transducers such as potentiometers, glass scales, and LVDTs. The linear sensing element is protected in an aluminum extrusion.
The measuring point along the sensing element (waveguide) is indicated by a passive marker (magnet), which needs no power. Measuring stroke ranges between 50 and 4000 mm are available.

- non-contact detection of the actual position
- IP 67, insensitive to contamination
- wear-free
- insensitive to shock and vibration
- absolute output signal
- resolution up to 0.0004" (0.001 mm) (depending on processor used)
- direct signal processing or through processor cards for interfacing with any control system or stand-alone operation

Series	**BTL Profile**
Shock load	100 g/6 ms per IEC 60068-2-27
Vibration	12 g, 10...2000 Hz per IEC 60068-2-6
Polarity reversal protected	yes
Overvoltage protection	Transzorb protection diodes
Dielectric constant	500 V (GND to housing)
Enclosure rating per IEC 60529	IP 67 (with BKS-S... IP 67 connector attached)
Housing material	Anodized aluminum
Housing attachment	Compression clamps
Connection type	Connector
EMC testing:	
RF emission	EN 55011 Group 1, Class A
Static electricity (ESD)	IEC 61000-4-2 Severity Level 3
Electromagnetic fields (RFI)	IEC 61000-4-3 Severity Level 3
Fast transients (BURST)	IEC 61000-4-4 Severity Level 4
Line-carried noise, induced by high-frequency fields	IEC 61000-4-6 Severity Level 3
Standard nominal strokes [mm]	0050, 0100, 0130, 0150, 0175, 0200, 0225, 0250, 0300, 0350, 0360, 0400, 0450, 0500, 0550, 0600, 0650, 0700, 0750, 0800, 0850, 0900, 0950, 1000, 1100, 1200, 1250, 1300, 1400, 1500, 1600, 1700, 1750, 1800, 1900, 2000, 2250, 2500, 2750, 3000, 3250, 3500, 3550, 3750, 4000.

▶ Included:
- Transducer (select your interface starting page **P.**4)
- User's guide
- Mounting feet with isolation washers and screws

Please order separately:
Magnets starting page **P.**14
Connectors starting page **BKS.**3

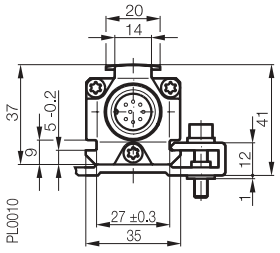



Series	**BTL Profile**
Magnets starting Page **P.**14	floating or captive

Transducer with floating magnet, S 32 connection with BKS-S 32M/BKS-S 32M-C connector
for transducers with analog interface, digital pulse interface and SSD interface Page P.4...**P.**9

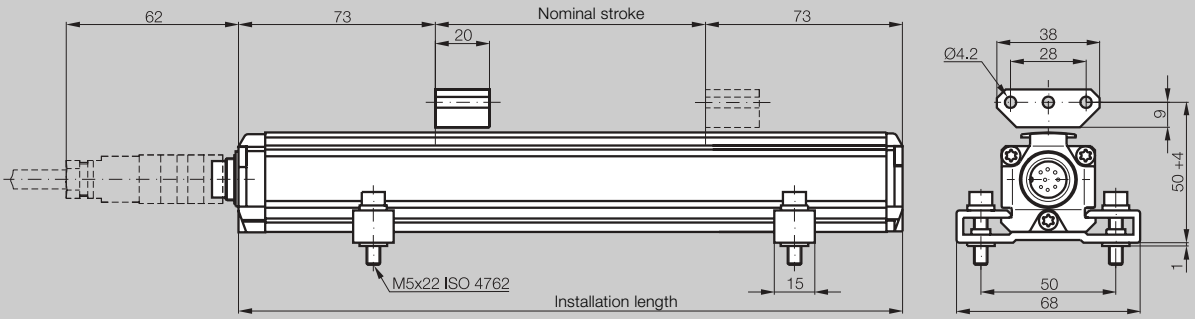

Transducer with captive magnet, S 32 connection with BKS-S 33M connector
for transducers with analog interface, digital pulse interface and SSD interface Page P.4...**P.**9

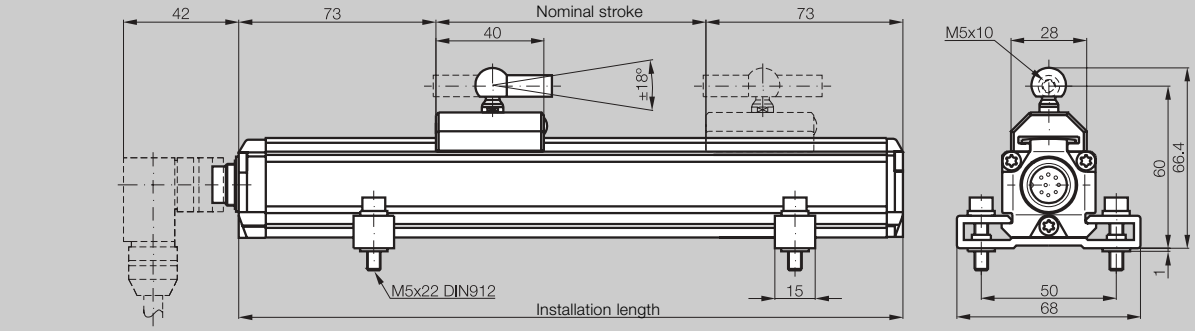

CANopen S 92 connection with BKS-S 92-00 connector
for transducer with CANopen interface Page P.10

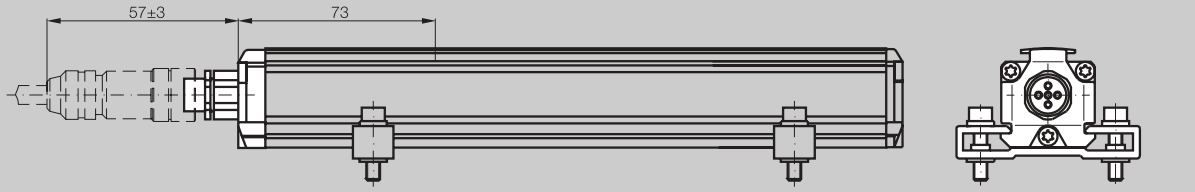

PROFIBUS-DP S103 connection with BKS-S 103-00, BKS-S 105-00 and BKS-S 48-15-CP-_ _
for transducer with PROFIBUS-DP interface Page P.12

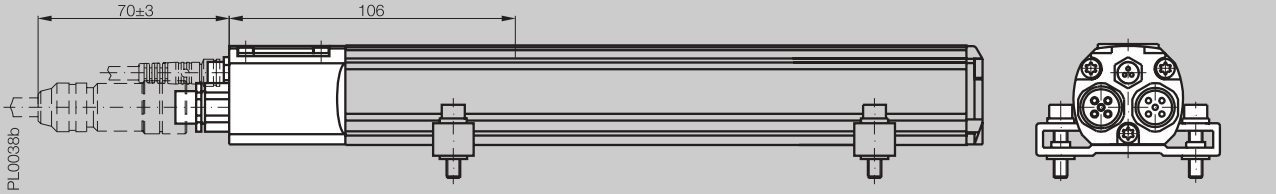

PROFIBUS-DP S 86 connection with BKS-S 86-00 connector
for transducer with PROFIBUS-DP interface Page P.12

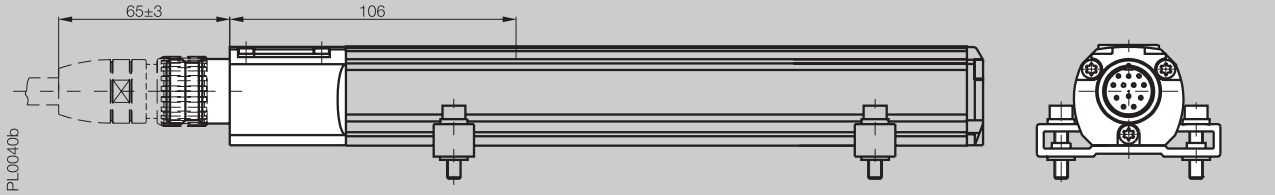

BTL P
General data
Analog interface
Digital pulse interface
SSD interface
CANopen interface
PROFIBUS-DP interface
Magnets floating
Magnets captive, control arm
BKS
Page **BKS.**3

Series	
Output signal	
Transducer interface	
Input interface	

The analog outputs of the profile series are potential-free with respect to the input voltage. The isolation is galvanic using DC/DC converters.

Analog type BTL transducers are available in various output configurations: 0...10V, 4...20 mA, 0...20 mA and -10...10V, with rising and falling output slope.

Micropulse Transducers – a non-contact alternative to contacting feedback devices

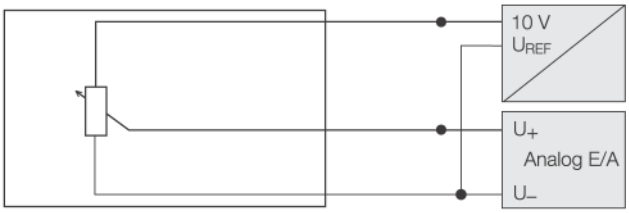

Potentiometer connections, block diagram

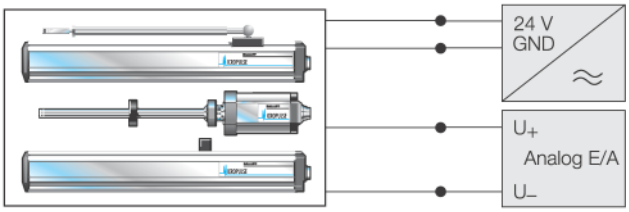

Micropulse transducer connections, block diagram

Ordering code		
Output		
Output voltage		
Output current		
Load current		
max. ripple		
Load resistance		
System resolution		
Hysteresis		
Repeatability		
Sampling rate		
max. non-linearity		
Temperature coefficient	Voltage output	
	Current output	
Supply voltage		
Current draw		
Polarity reversal protected		
Overvoltage protection		
Dielectric constant		
Operating temperature		
Storage temperature		

Pin assignments	Pin	Color
Output signals	1	YE
	2	GY
	3	PK
	5	GN
Supply voltage	6	BU
	7	BN
	8	WH

Connect shield to housing

▶ Included:
- Transducer
- Mounting feet with isolation washers and screws
- User's guide

Please order separately:
Magnets starting page **P.**14
Connectors starting page **BKS.**3

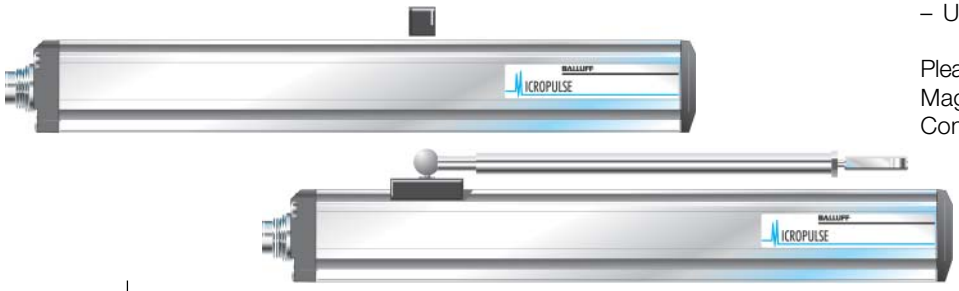

	BTL Profile analog **A** analog	BTL Profile analog **E** analog	BTL Profile analog **C** analog	BTL Profile analog **G** analog
	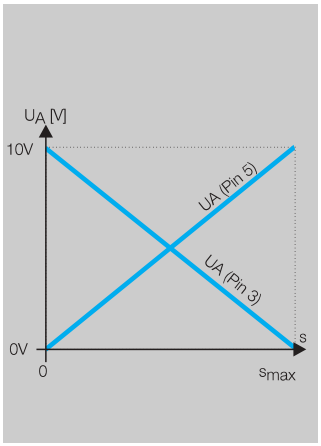	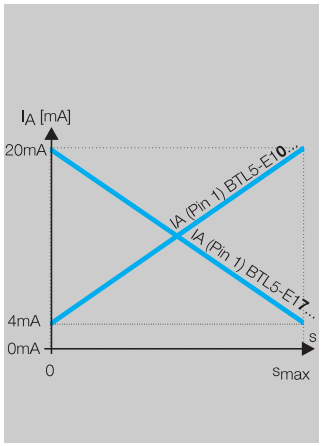	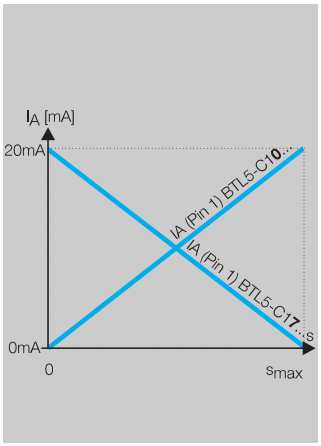	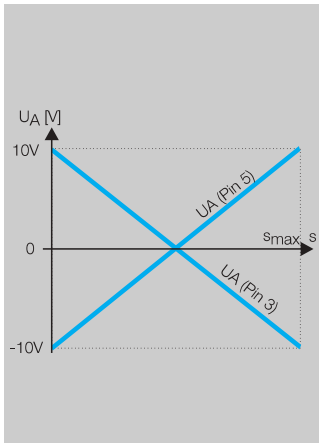
	BTL5-**A**11-M_ _ _ _-P-S 32	BTL5-**E**1_-M_ _ _ _-P-S 32	BTL5-**C**1_-M_ _ _ _-P-S 32	BTL5-**G**11-M_ _ _ _-P-S 32
	potential-free	potential-free	potential-free	potential-free
	0...10 V and 10...0 V			**–10...10 V and 10...–10 V**
		4...20 mA or 20...4 mA	**0...20 mA or 20...0 mA**	
	max. 5 mA			max. 5 mA
	≤ 5 mV			≤ 5 mV
		≤ 500 Ohm	≤ 500 Ohms	
	≤ 0.1 mV	**≤ 0.2 µA**	**≤ 0.2 µA**	**≤ 0.1 mV**
	≤ 4 µm			
	System resolution/min. 2 µm			
	$f_{STANDARD}$ = 1 kHz			
	±100 µm to 500 mm nominal stroke			
	±0.02 % 500...4000 mm nominal stroke			
	[150 µV/°C + (5 ppm/°C × P × U/L)] × ΔT			
	[0.6 µA/°C + (10 ppm/°C × P × I/L)] × ΔT			
	24 V DC ±20 %			
	≤ 150 mA			
	yes			
	Transzorb protection diodes			
	500 V (Ground to housing)			
	–40...+85 °C			
	–40...+100 °C			
	BTL5-**A**11...	BTL5-**E**10... / BTL5-**E**17...	BTL5-**C**10... / BTL5-**C**17...	BTL5-**G**11...
		4...20 mA / 20...4 mA	0...20 mA / 20...0 mA	
	0 V Output	0 V Output	0 V Output	0 V Output
	10...0 V	10...0 V	10...0 V	10...–10 V
	0...10 V	0...10 V	0...10 V	–10 ... 10V
	GND	GND	GND	GND
	+24 V DC	+24 V DC	+24 V DC	+24 V DC
	(GND)	(GND)	(GND)	(GND)

▶ Please enter code for output signal and nominal stroke length in ordering code.

▶ Preferred models interface A BTL5-A11-M_ _ _ _-P-S 32 highlighted in blue are available from stock.

Ordering example:
BTL5-E1_-M_ _ _ _-P-S 32

Output signal

1	rising and falling (for A and G)
0	rising
7	falling (for C and E)

Standard nominal strokes [mm]

0050, 0100, 0130, 0150, 0175, 0200, 0225, 0250, 0300, 0350, 0360, 0400, 0450, 0500, 0550, 0600, 0650, 0700, 0750, 0800, 0850, 0900, 0950, 1000, 1100, 1200, 1250, 1300, 1400, 1500, 1600, 1700, 1750, 1800, 1900, 2000, 2250, 2500, 2750, 3000, 3250, 3500, 3550, 3750, 4000

BTL P
General data
Analog interface
Digital pulse interface
SSD interface
CANopen interface
PROFIBUS-DP interface
Magnets floating
Magnets captive, control arm
BKS
Page **BKS.**3

cost-effective

Series	
Transducer interface	
Input interface	

P Interface

Compatible with BTA processors and various OEM controls, e.g., Siemens, Schleicher, B & R, Bosch, Mitsubishi, Schiele, Parker, Esitron, Philips, WAGO etc.. Reliable signal transmission, even over cable lengths up to 500 m between BTA and BTL, is assured by the especially noise-immune RS485 differential drivers and receivers. Noise signals are effectively suppressed.

M Interface

The I and M interfaces are control-specific interface variations.

I Interface

Used for parallel operation of multiple transducers, for example up to 4 transducers can be controlled by a single BTA-M/PMT card (see starting Page **BTA**.3).

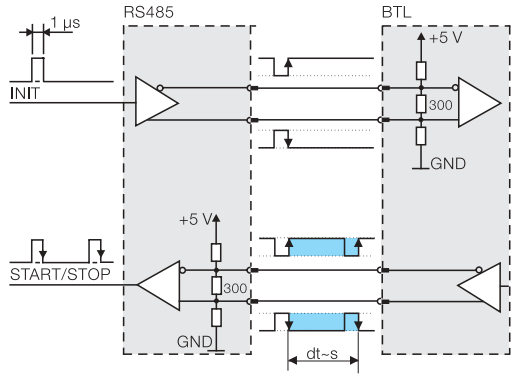

Block diagram of P-interface

Highly precise digitizing of the P pulse signal

Companies developing their own control and processing electronics can create a highly accurate P-interface cost effectively and with a minimum of effort using the Balluff digitizing chip. The digitizing chip was developed as a high-resolution, configurable ASIC for the Micropulse P-interface.

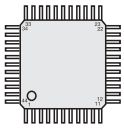

Digitizing chip 44QFP

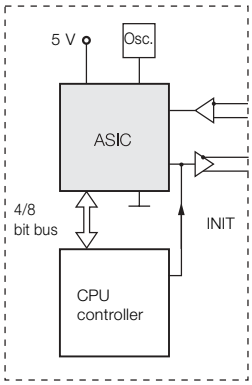

Controller or Processing electronics

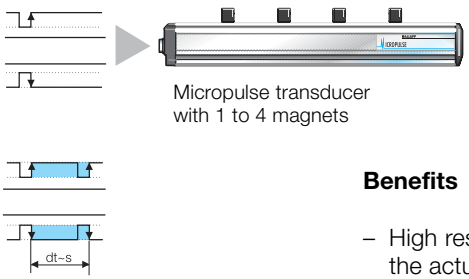

P pulse signal

Micropulse transducer with 1 to 4 magnets



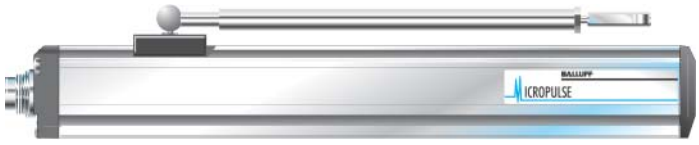

ASIC INFO:
+49 (0) 71 58/1 73-2 41

Benefits

- High resolution: the actual 1 µm of the BTL internally is fully supported by the 5 µm resolution of the chip (at low clock frequency 2 or 20 MHz)
- Position data from 4 magnets can be processed simultaneously
- 4/8-bit processor interface

Ordering code			
System resolution			
Repeatability			
Resolution			
Hysteresis			
Sampling rate			
max. non-linearity			
Temperature coefficient of overall system			
Supply voltage			
Current draw			
Operating temperature			
Storage temperature			

Pin assignments		Pin	Color
In-/output signals	Input	1	YE
	Output	2	GY
	Input	3	PK
	Output	5	GN
Supply voltage		6	BU
		7	BN
		8	WH
Connect shield to housing			

	BTL Profile	BTL Profile	BTL Profile
	Pulse **P**	Pulse **M**	Pulse **I**
	Pulse **P**	Pulse **M**	Pulse **I**
	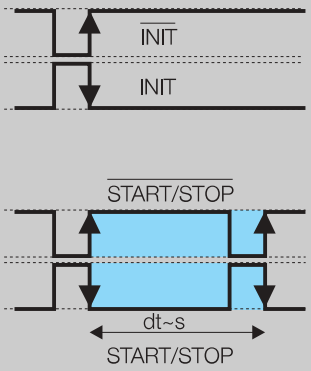	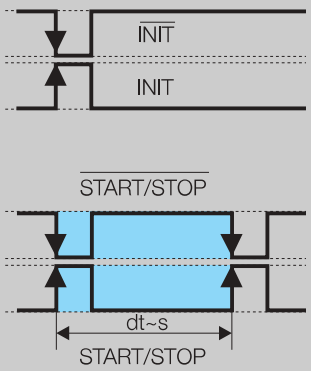	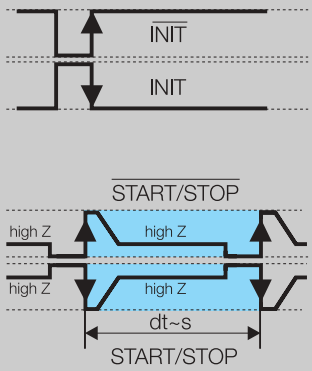
	BTL5-**P**1-M_ _ _ _-P-S 32	BTL5-**M**1-M_ _ _ _-P-S 32	BTL5-**I**1-M_ _ _ _-P-S 32
	processing-dependent		
	2 µm or ±1 digit depending on processing electronics		
	≤ 2 µm		
	≤ 4 µm		
	$f_{STANDARD}$ = 1 kHz = ≤ 1400 mm		
	±100 µm up to 500 mm nominal stroke		
	±0,02 % 500...4000 mm nominal stroke		
	(6 µm + 5 ppm × L)/°C		
	24 V DC ±20 %		
	≤ 90 mA		
	–40...+85 °C		
	–40...+100 °C		
	BTL5-**P**1-M...	BTL5-**M**1-M...	BTL5-**I**1-M...
	INIT	INIT	INIT
	START/STOP	START/STOP	START/STOP
	$\overline{\text{INIT}}$	$\overline{\text{INIT}}$	$\overline{\text{INIT}}$
	$\overline{\text{START/STOP}}$	$\overline{\text{START/STOP}}$	$\overline{\text{START/STOP}}$
	GND	GND	GND
	+24 V DC	+24 V DC	+24 V DC
	(GND)	(GND)	(GND)

▶ Please enter code for nominal stroke in ordering code!

▶ Preferred models interface P
BTL5-P1-M_ _ _ _-P-S 32
highlighted in blue are available from stock.

Ordering example:
BTL5-P1-M_ _ _ _-P-S 32

Standard nominal strokes [mm]

0050, 0100, 0130, 0150, 0175, 0200, 0225, 0250, 0300, 0350, 0360, 0400, 0450, 0500, 0550, 0600, 0650, 0700, 0750, 0800, 0850, 0900, 0950, 1000, 1100, 1200, 1250, 1300, 1400, 1500, 1600, 1700, 1750, 1800, 1900, 2000, 2250, 2500, 2750, 3000, 3250, 3500, 3550, 3750, 4000

▶ Included:
– Transducer
– Mounting feet with isolation washers and screws
– User's guide

Please order separately:
Magnets starting page **P.**14
Connectors starting page **BKS.**3

BTL P
General data
Analog interface
Digital pulse interface
SSD interface
CANopen interface
PROFIBUS-DP interface
Magnets floating
Magnets captive, control arm
BKS
Page **BKS.**3
BTA
Page **BTA.**3

SSD Interface

Synchronous serial data transmission for controls made by Siemens, Schleicher, B & R, PEES, Schiele, Parker, Esitron, PEP etc. as well as for Balluff BDD-AM 10-...-1-SSD and BDD-CC 08-1-SSD display/ controllers.

Reliable signal transmission, even over cable lengths of up to 400 m between control and BTL transducer is assured by especially noise-immune RS485/422 differential line drivers and receivers. Any noise signals are effectively suppressed.

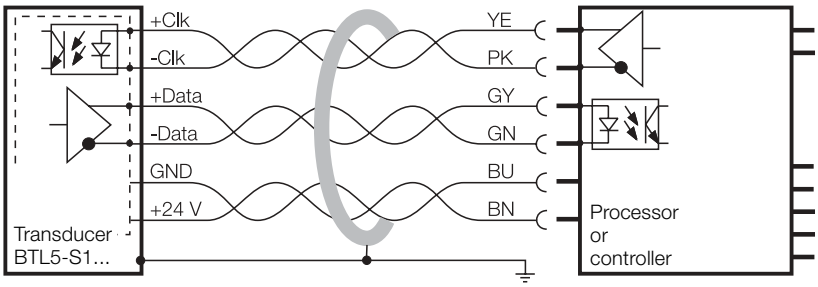

BTL5-S1... with processor/controller, wiring example

Clock frequency is a function of cable length

Cable length	Clock freq.
< 25 m	< 1000 kHz
< 50 m	< 500 kHz
< 100 m	< 400 kHz
< 200 m	< 200 kHz
< 400 m	< 100 kHz

Super-fast 2 kHz Sampling rate

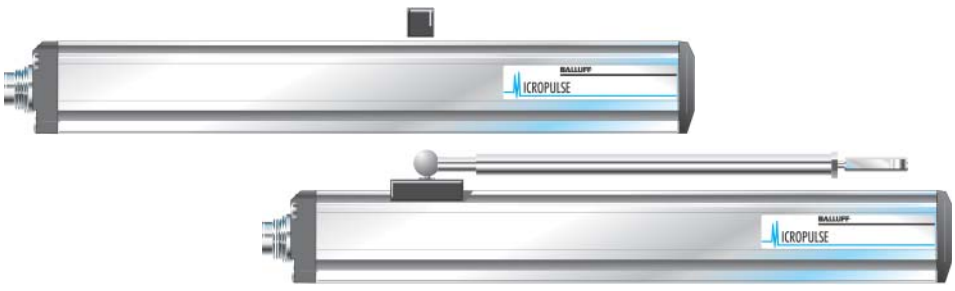

Series	**BTL Profile**
Output signal	synchronous serial
Transducer interface	**S**
Input interface	synchronous serial

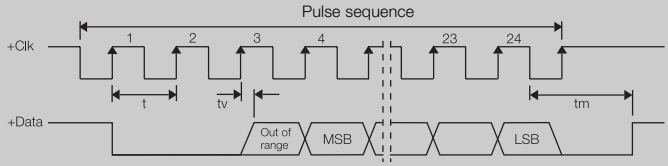

Ordering code	BTL5-**S**1_ _-M_ _ _ _-P-S 32
Repeatability	±1 digit
System resolution depending on version (LSB)	1, 5, 10, 20 or 40 µm
Hysteresis	≤ 1 Digit
Sampling rate	$f_{STANDARD}$ = 2 kHz
max. non-linearity	±30 µm at 5 und 10 µm Resolution or ≤ ±2 LSB
Temperature coefficient of overall system	(6 µm + 5 ppm × L) /°C
Supply voltage	24 V DC ±20 %
Current draw	≤ 80 mA
Operating temperature	–40...+85 °C
Storage temperature	–40...+100 °C

Pin assignments	Pin	Color	
Control and data signals	1	YE	+Clk
	2	GY	+Data
	3	PK	–Clk
	5	GN	–Data
Supply voltage (external)	6	BU	GND
	7	BN	+24 V DC
	8	WH	must remain unconnected

▶ Please enter code for coding, system resolution and nominal stroke length in ordering code.

▶ Preferred models interface S
BTL5-S112-M_ _ _ _-P-S 32

Ordering example:
BTL5-S1_ _-M_ _ _ _-P-S 32

Coding

0	Binary code rising (24 bits)
1	Gray code rising (24 bits)
6	Binary code rising (25 bits)
7	Gray code rising (25 bits)

System resolution

1	1 µm
2	5 µm
3	10 µm
4	20 µm
5	40 µm

Standard nominal strokes [mm]

0100, 0130, 0150, 0175, 0200, 0225, 0250, 0300, 0350, 0360, 0400, 0450, 0500, 0550, 0600, 0650, 0700, 0750, 0800, 0850, 0900, 0950, 1000, 1100, 1200, 1250, 1300, 1400, 1500, 1600, 1700, 1750, 1800, 1900, 2000, 2250, 2500, 2750, 3000, 3250, 3500, 3550, 3750, 4000

▶ Included:
– Transducer
– Mounting feet with isolation washers and screws
– User's guide

Please order separately:
Magnets starting page **P.**14
Connectors starting page **BKS.**3

BTL P
General data
Analog interface
Digital pulse interface
SSD interface
CANopen interface
PROFIBUS-DP interface
Magnets floating
Magnets captive, control arm
BKS
Page **BKS.**3

CANopen Draft Standard 406 (Encoder Profile)

CANopen interface

Based on CAN (ISO/IEC 7498 and DIN ISO 11898), CANopen provides a Layer-7 implementation for industrial CAN networks. The serial data protocol of the CAN specification is defined according to the producer-consumer principle as opposed to most other fieldbus protocols. This eliminates target addressing of the process data. Each bus station decides for itself how the received data are processed.

The CANopen interface of the Micropulse transducer is compatible with CANopen conforming with CiA Standard DS301 Rev. 3.0, and with CAL and Layer 2 CAN networks.

CAN-BUS features

- Line topology, star structure also possible using repeaters
- Cost-effective 2-wire cabling
- Fast response times, high data integrity using CRC, hamming distance of 6
- Potential-free data transmission (RS485)
- 1 Mbps at cable lengths < 25 m
- Number of stations protocol-limited to 127
- Using multiple magnets: A minimum spacing of > 65 mm must be maintained.

CANopen offers a high level of flexibility with respect to functionality and data exchnge. Using a standard data sheet in the form of an EDS file it is easy to link the Micropulse transducers to any CANopen system.

Process Data Object (PDO)

Micropulse transducers send their position information optionally in one or two PDOs with 8 bytes of data each. The contents of the PDOs is free configurable. The following information can be sent:

- Current magnet position with resolution in 5 µm steps
- Current velocity of the magnet with resolution selectable in 0.1mm/s steps
- Current status of the four freely programmable cams.

Synchronisation Object (SYNC)

Serves as a net-wide trigger for synchronizing all network participants. When the SYNC object is received, all Micropulse transducers active on the bus store their current position and velocity information and then send it sequentially to the control. This assures time-synchronous capture of the measured values.

Emergency Object

This object is sent with the highest priority. This is used for example for error messages when cam states change.

Service Data Object (SDO)

Service Data Objects transmit the parameters for the transducer configuration. The transducer configuration may be carried out on the bus by the controller, or offline using a PC with a configuration tool which runs under Windows. The configuration is stored in the transducer in a non-volatile memory.

CiA 199911-301v30/11-009

CANopen system structure

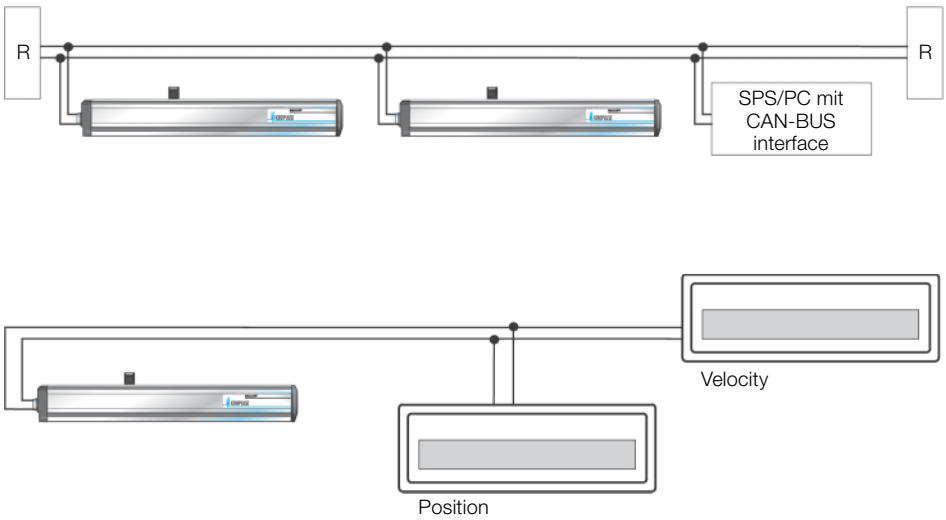

Simple CANopen system with position and velocity displays

Series	**BTL Profile**
Output signal	CANopen
Transducer interface	**H**
Input interface	CANopen

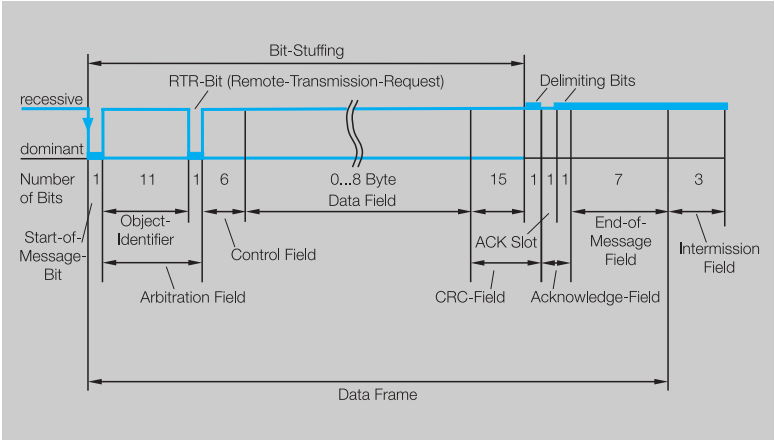

Ordering code	BTL5-**H**1_ _-M_ _ _ _-P-S 92
CANopen Version	DS301 V 3.0, DS406 V 2.0
CANopen-interface	potential-free
Repeatability	±1 digit
System resolution configurable Position	5 µm increments configurable
System resolution configurable Velocity	0.1 mm/s increments configurable
Hysteresis	≤ 1 digit
Sampling rate	$f_{STANDARD}$ = 1 kHz
max. non-linearity	±30 µm at 5 µm resolution
Temperature coefficient of overall system	(6 µm + 5 ppm × L)/°C
Magnet traverse speed	any
Supply voltage	24 V DC ±20 %
Current draw	≤ 100 mA
Operating temperature	–40...+85 °C
Storage temperature	–40...+100 °C

Cable length [m] per CiA DS301	< 25	< 50	< 100	< 250	< 500	< 1000	< 1250	< 2500
Baud rate [kBaud] per CiA DS301	1000	800	500	250	125	100	50	20/10

Pin assignments	Pin	Color	
Control and data signals	1	WH	CAN_GND
	4	GY	CAN_HIGH
	5	GN	CAN_LOW
Supply voltage (external)	2	BN	+24 V
	3	BU	0 V (GND)

Using the CANopen interface and cable lengths up to 2500 m, the signal is sent at a length-dependent baud rate to the control. The high noise immunity of the connection is achieved using differential drivers and by the data monitoring scheme.

▶ Included:
- Transducer
- Mounting feet with isolation washers and screws
- User's guide (transducer)
- User's guide (configuration and CAN link)

Please order separately:
Magnets starting page **P.**14
Connectors starting page **BKS.**4

▶ Please enter code for software configuration, baud rate and nominal stroke length in order code.

Ordering example:
BTL5-H1_ _-M_ _ _ _-P-S 92

Software configuration

1	1 × Position and 1 × Velocity
2	2 × Position and 2 × Velocity
3	4 × Position

Baud rate

0	1 MBaud
1	800 kBaud
2	500 kBaud
3	250 kBaud
4	125 kBaud
5	100 kBaud
6	50 kBaud
7	20 kBaud
8	10 kBaud

Standard nominal strokes [mm]

0050, 0100, 0130, 0150, 0175, 0200, 0225, 0250, 0300, 0350, 0360, 0400, 0450, 0500, 0550, 0600, 0650, 0700, 0750, 0800, 0850, 0900, 0950, 1000, 1100, 1200, 1250, 1300, 1400, 1500, 1600, 1700, 1750, 1800, 1900, 2000, 2250, 2500, 2750, 3000, 3250, 3500, 3550, 3750, 4000

BTL P
General data
Analog interface
Digital pulse interface
SSD interface
CANopen interface
PROFIBUS-DP interface
Magnets floating
Magnets captive, control arm
BKS
Page **BKS.**4

PROFIBUS-DP Standard EN 50170

As the market leading standard for serial data transmission for process automation, PROFIBUS-DP is the ideal choice for implementing automation tasks with cycle times of > 5 ms.

Data transmission

A PROFIBUS telegram can contain up to 244 bytes of user data per telegram and station. The BTL5-T uses max. 32 bytes (max. 4 position values and max. 4 velocity values) for process data transmission. Up to 126 active stations (Address 0...125) can be connected on PROFIBUS-DP. User data cannot be sent with station address 126. This address is used as the default address for bus stations that have to be parameterized by a Class 2 master (for setting the device address if there are no mechanical switches available).
Each PROFIBUS station has the same priority. Prioritizing of individual stations is not intended, but can be done by the master since the bus transmission only makes up a fraction of the process cycle anyway.
At a transmission rate of 12 Mbps, the transmission time for an average data telegram is in the 100 µs range.

Master

There are two types of possible masters for PROFIBUS-DP. Master Class 1 carries out the user data interchange with the connected slaves. Master Class 2 is intended for startup and diagnostic purposes and may be used to briefly assume control of a slave.

GSD (Device Master Data)

The length of the data exchangeable with a slave is defined in the Device Master Data file (GSD) and is checked by the slave with the configuration telegram and confirmed for correctness.
In modular systems, various configurations are defined in the GSD file. Depending on the desired functionality, one of these configurations can be selected by the user when the system is configured. The BTL5-T is a modular device with the possibility of selecting the number of magnets (position values).

Slave

Once a PROFIBUS master has received the parameter set defined for the slave, it is able to exchange data. The parameter set consits of slave parameters and configuration data. The parameter data contain the description of the slave settings (e.g. resolution of a position value). The configuration data describe the length and structure of the data telegram.
For security reasons a slave is allowed to be written with new output data only by the master which previously parameterized and configured it. Only after the slave acknowledges both messages (parameter data and configuration data) can it be assumed that the configuration and function of the slave are known to the master.

Process data

Under PROFIBUS-DP the default is for process data to be sent from the master to slaves acyclically and for the slave data to then be queried. To ensure synchronization of multiple devices, the master may use the SYNC and FREEZE services.

After a RESET or after power is restored, the master attempts to establish contact with all the parameterized slaves in order of lowest to highest address.
PROFIBUS-DP permits multiple Class 1 and Class 2 masters to be connected (see illustration below).

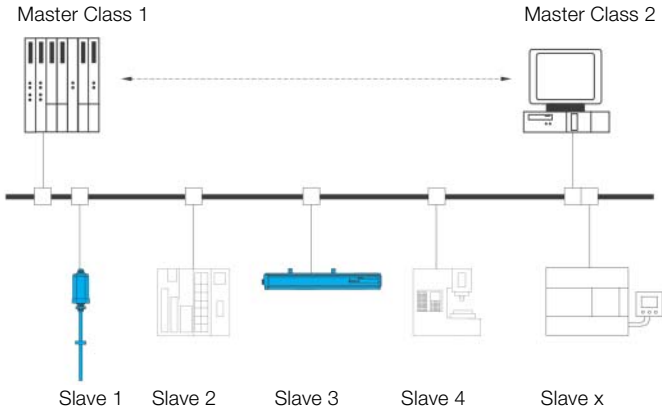



Device address DIP switch settable

Using multiple magnets

A minimum spacing of > 65 mm must be maintained.

Series	**BTL Profile**
Output signal	PROFIBUS-DP
Transducer interface	**T**
Input interface	PROFIBUS-DP

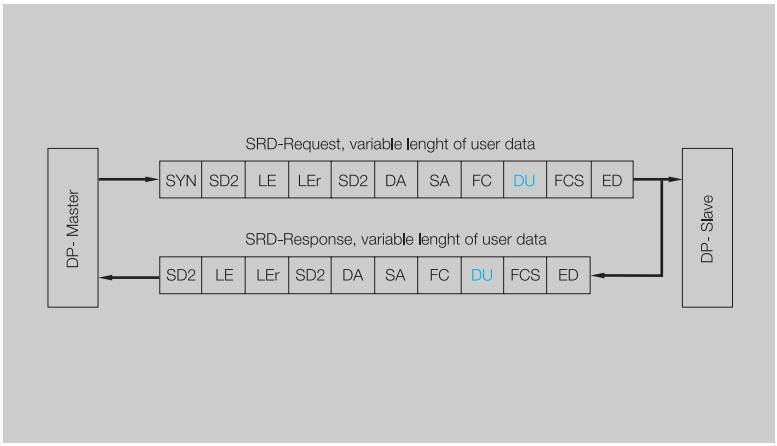

Ordering code Connector version S103	BTL5-**T**1_ 0-M_ _ _ _-P-S103
Connector version S 86	BTL5-**T**1_ 0-M_ _ _ _-P-S 86

Profibus-Version		EN 50170, Encoder				
Profibus-interface		potential-free				
Repeatability		±1 digit				
System resolution	Position	5 µm increments configurable				
configurable	Velocity	0.1 mm/s increments configurable				
Hysteresis		≤ 1 digit				
Sampling rate		$f_{STANDARD}$ = 1 kHz				
max. non-linearity		±30 µm at5 µm resolution				
Temperature coefficient of overall system		(6 µm + 5 ppm × L)/°C				
Magnet traverse speed		any				
Supply voltage		24 V DC ±20 %				
Current draw		≤ 120 mA				
Operating temperature		–20...+85 °C				
Storage temperature		–20...+100 °C				
GSD file		BTL504B2.GSD				
Address assignment		mechanical switches and Master Class 2				
Cable length [m]		< 100	< 200	< 400	< 1000	< 1200
Baud rate [Kbps]		12000	1500	900	187.5	93.7/19.2/9.6

Pin assignments		S103 5-pin	S103 3-pin	S 86
Control and data signals	Data GND	3		1
	RxD/TxD-N (A)	2		2
	RxD/TxD-P (B)	4		4
	VP +5 V	1		6
Supply voltage and shield	+24 V		1	7
	0 V (GND)		3	8
	Ground PROFIBUS-DP	5		
	Shield Supply		4	

▶ Please enter code for software configuration and nominal stroke length in ordering code!

▶ Included:
- Transducer
- Mounting feet with isolation washers and screws
- User's guide

Please order separately:
Magnets starting page **P.**14
Connectors page **BKS.**6
GSD file BTL5TGSD 119399 (free of charge)

Ordering example:
BTL5-T1_ 0-M_ _ _ _-P-S103
BTL5-T1_ 0-M_ _ _ _-P-S 86

Software configuration		**Standard nominal strokes [mm]**
1	1 Magnet	0050, 0100, 0130, 0150, 0175, 0200, 0225, 0250, 0300, 0350, 0360, 0400, 0450, 0500, 0550, 0600, 0650, 0700, 0750, 0800, 0850, 0900, 0950, 1000, 1100, 1200, 1250, 1300, 1400, 1500, 1600, 1700, 1750, 1800, 1900, 2000, 2250, 2500, 2750, 3000, 3250, 3500, 3550, 3750, 4000
2	2 Magnets	
3	4 Magnets	

BTL P
General data
Analog interface
Digital pulse interface
SSD interface
CANopen interface
PROFIBUS-DP interface
Magnets floating
Magnets captive, control arm
BKS
Page **BKS.**6

Balluff magnets are available in captive or floating styles. All BTL5 magnets shown here can be used on any Balluff Micropulse transducer. Maximum resolution and repeatability are achieved using BTL5-F/M/N-2814-1S captive magnets.

The BTL5-P-3800-2 magnet can be used with a vertical offset from the upper surface of the transducer body of 0...4 mm, and the BTL5-P-5500-2 permits a distance of 5...15 mm. The BTL5-P-4500-1 is an electromagnet and requires a supply voltage of 24V, which can be turned on and off for selective activation. This allows multiplex operation with multiple magnets on a single transducer, since only one magnet is active at a time.

Description	**Magnet**
for Series	BTL Profile
Type	floating

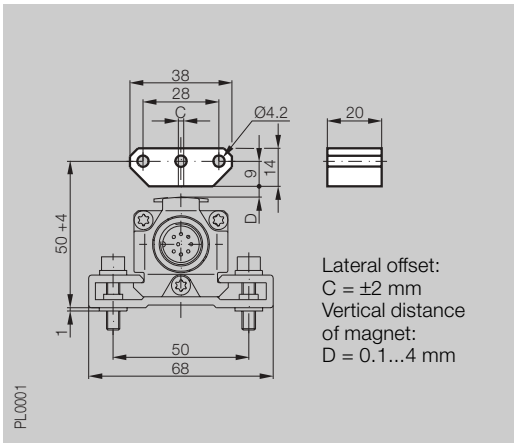

Ordering code	BTL5-P-**3800**-2
Housing material	Plastic
Weight	approx. 12 g
Magnet traverse speed	any
Supply voltage	
Current draw	
Operating temperature/Storage temperature	–40...+85 °C
Included	Magnet 2 mounting screws DIN 84 M4×35-A2 with washers and nuts
Accessories (please order separately)	

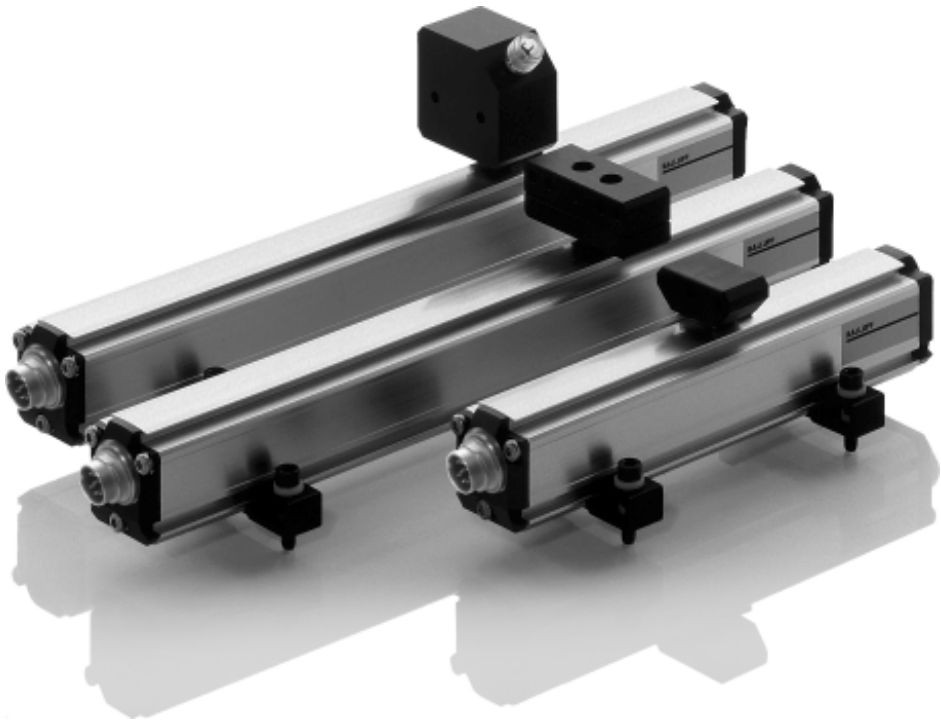



Mounting feet with isolation washers and screws included with transducer.

Replacement: 1 pair mounting feet and screws Type. No.: 110404

Profile length (measuring range)	Number of mounting feet
up to 250 mm	1
251 to 750 mm	2
751 to 1250 mm	3
1251 to 1750 mm	4
1751 to 2250 mm	5
2251 to 2750 mm	6
2751 to 3250 mm	7
3251 mm	8

Magnet	**Magnet**
BTL Profile	BTL Profile
floating	floating

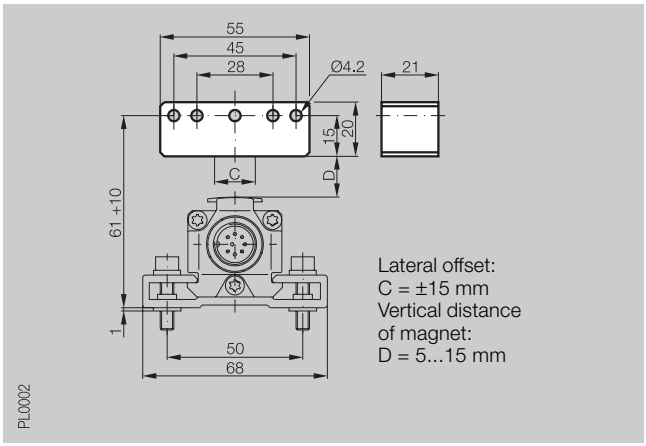

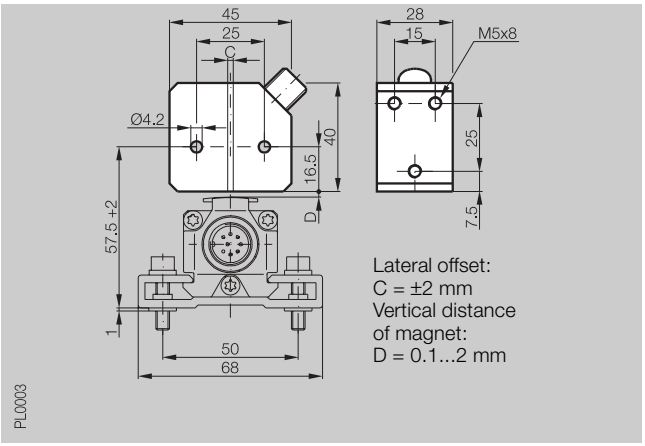

BTL5-P-**5500**-2	BTL5-P-**4500**-1
Plastic	Plastic
approx. 40 g	approx. 90 g
any	any
	24 V DC
	100 mA
–40...+85 °C	–40...+60 °C
Magnet	Magnet

	Straight connector BKS-B 19-1-_ _
	Right angle connector BKS-B 20-1-_ _

Please indicate cable length in ordering code:
03, 05, 10, 15
= PVC, 3 m, 5 m, 10 m or 15 m
PU-03, PU-05, PU-10, PU-15
= PUR, 3 m, 5 m, 10 m or 15 m

Non-contact! Vertical offset 0.1...4 mm or 5...15 mm

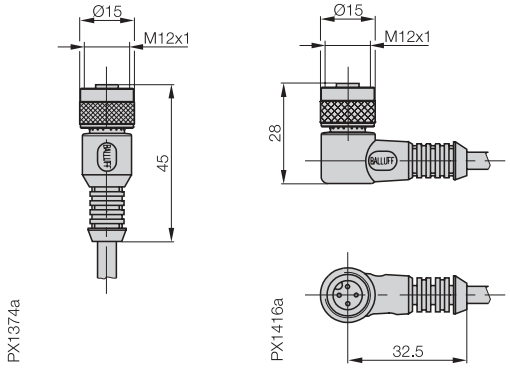

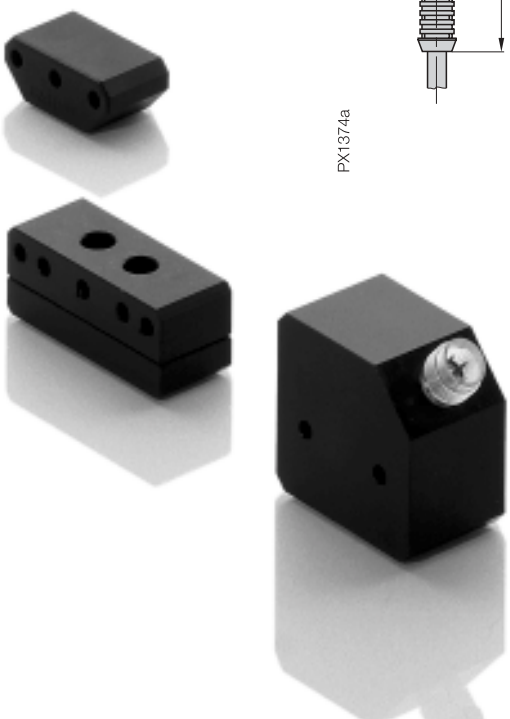

Description	**Magnet**	**Magnet**
for Series	BTL Profile	BTL Profile
Type	captive	captive
	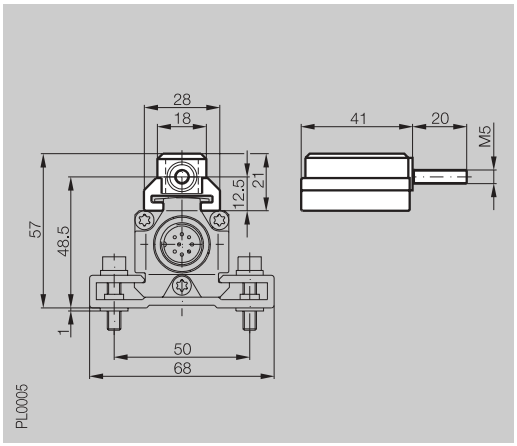	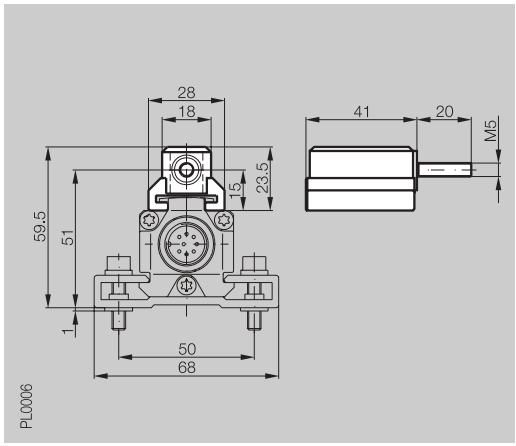
Ordering code	BTL5-**M-2814**-1S	BTL5-**N-2814**-1S
Material Housing	Anodized aluminum	Anodized aluminum
Slide surface	Plastic	Plastic
Weight	approx. 32 g	approx. 35 g
Magnet traverse speed	any	any
Operating temperature/Storage temperature	–40...+85 °C	–40...+85 °C





Mounting feet with isolation washers and screws included with transducer.

Replacement: 1 pair mounting feet and screws Type. No.: 110404

Profile length (measuring range)	Number of mounting feet
up to 250 mm	1
251 to 750 mm	2
751 to 1250 mm	3
1251 to 1750 mm	4
1751 to 2250 mm	5
2251 to 2750 mm	6
2751 to 3250 mm	7
3251 to 4000 mm	8

	Magnet
	BTL Profile
	captive

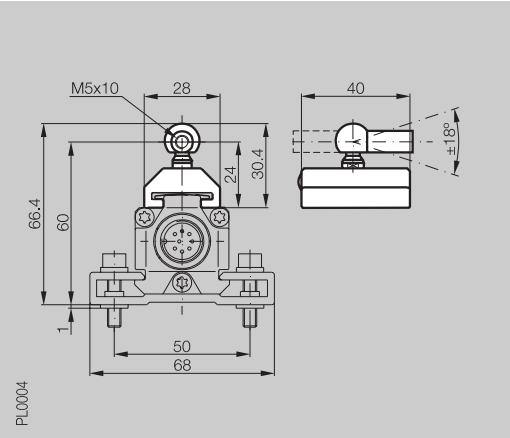

	BTL5-**F-2814**-1S
	Plastic
	Plastic
	approx. 28 g
	any
	–40...+85 °C

Description for	**Control arm** (including swivel eye) Magnet BTL5-F-2814-1S

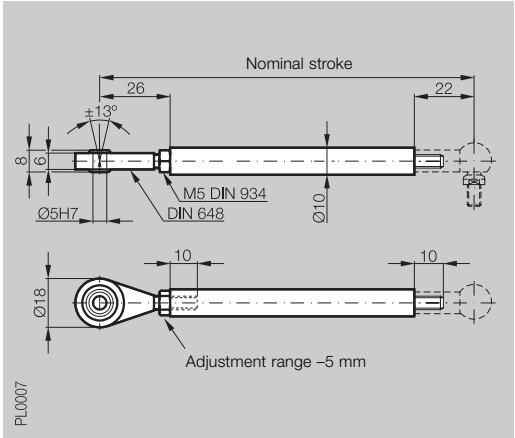

Ordering code	BTL2-**GS10-**_ _ _ _-A
Material	Al
Weight	approx. 150 g/m

▶ Please enter code for nominal stroke in ordering code!

Ordering example:
BTL2-GS10-_ _ _ _**-A**

Standard nominal strokes [mm]

0075, 0100, 0125, 0150, 0200, 0250, 0350, 0400, 0450, 0500, 0600, 0800, 1000, 1500, 2000



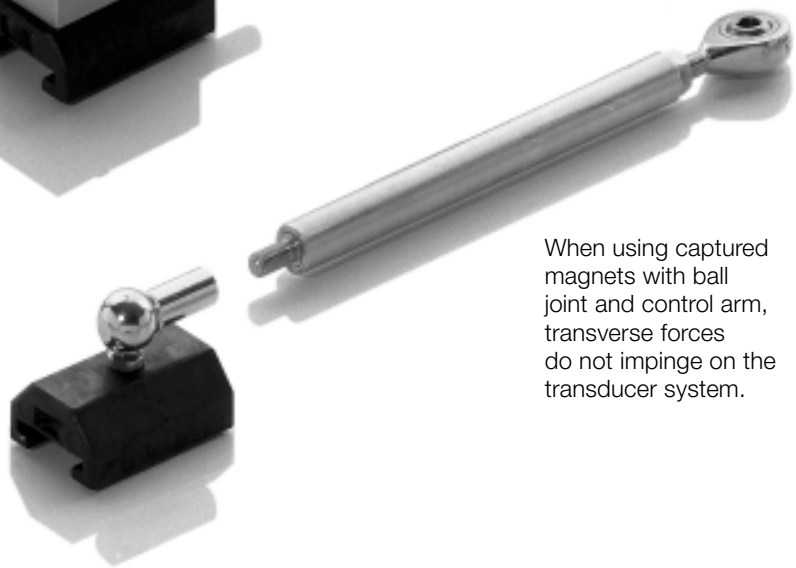

Swivel eye
part no. 714619

When using captured magnets with ball joint and control arm, transverse forces do not impinge on the transducer system.

