IN5409

Inductive sensor

INE3004DBPKG

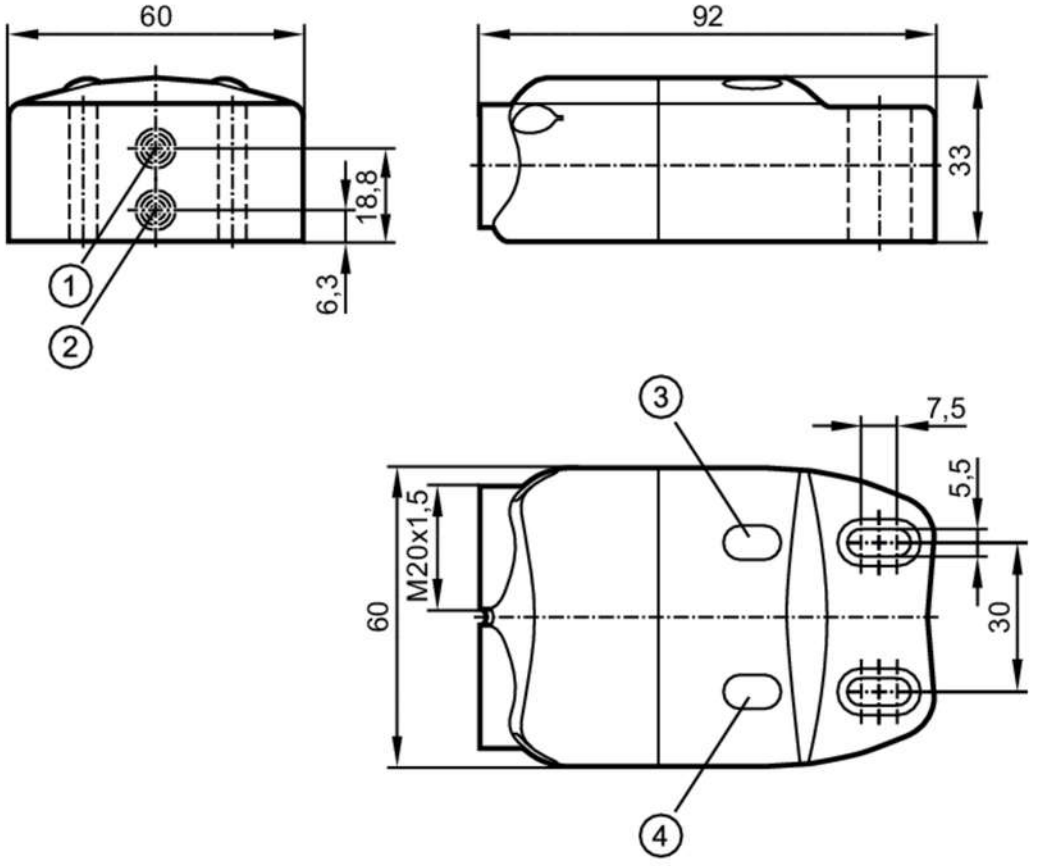

1 sensor 1
2 sensor 2
3 LED OUT 2
4 LED OUT 1

Product characteristics		
Electrical design		PNP
Output function		2 x normally open
Sensing range	[mm]	4
Housing		rectangular
Dimensions	[mm]	33 x 60 x 92
Electrical data		
Operating voltage	[V]	10...30 DC; (; to PELV)
Current consumption	[mA]	15; (a maximum of one output is switched)
Protection class		III
Reverse polarity protection		yes
Outputs		
Electrical design		PNP
Output function		2 x normally open
Max. voltage drop switching output DC	[V]	2.5

IN5409

Inductive sensor

INE3004DBPKG

Permanent current rating of switching output DC	[mA]	100	
Switching frequency DC	[Hz]	500	
Short-circuit protection		yes	
Type of short-circuit protection		pulsed	
Overload protection		yes	
Valve control		24 (< 20 W)	
Detection zone			
Sensing range	[mm]	4	
Real sensing range Sr	[mm]	4 ± 10 %	
Operating distance	[mm]	0...3.25	
Accuracy / deviations			
Correction factor		steel: 1 / stainless steel: 0.7 / brass: 0.5 / aluminium: 0.4 / copper: 0.3	
Hysteresis	[% of Sr]	1...15	
Switch point drift	[% of Sr]	-10...10	
Operating conditions			
Ambient temperature	[°C]	-25...80	
Protection		IP 67	
Tests / approvals			
EMC		EN 60947-5-2	
		EN 55011	class B
MTTF	[years]	1072	
Mechanical data			
Weight	[g]	162.65	
Housing		rectangular	
Mounting		non-flush mountable	
Dimensions	[mm]	33 x 60 x 92	
Materials		housing: PA; screws: stainless steel; washer: stainless steel	
Displays / operating elements			
Display		switching status	2 x LED, yellow
Accessories			
Items supplied		washers: 2	
		cylinder screws: 2 x (M5 x 18 mm)	
Remarks			
Pack quantity		1 pcs.	

IN5409

Inductive sensor

INE3004DBPKG

Electrical connection

terminal strip in the terminal chamber:

Connection

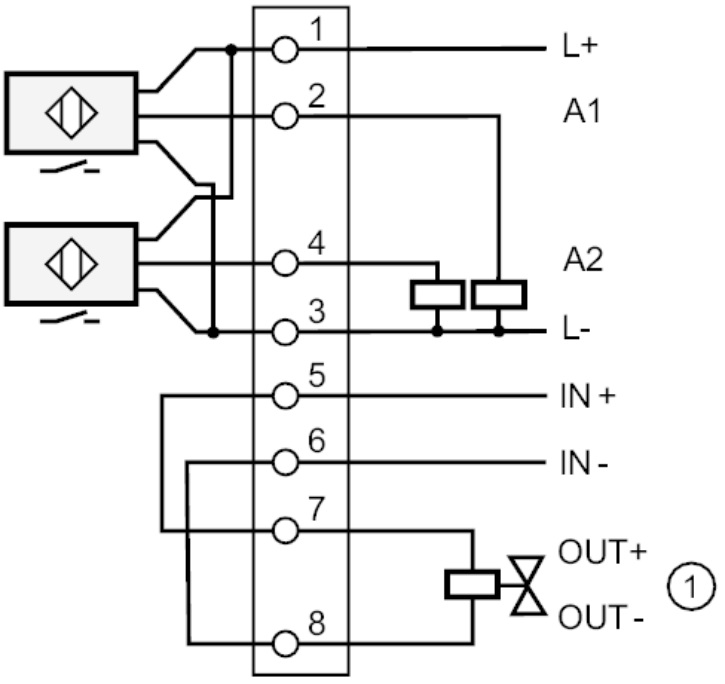

1: output solenoid valve