Machine Safety
Switch Box for Disconnecting the Actuator Voltage V 2
TBSB-L5-CS09

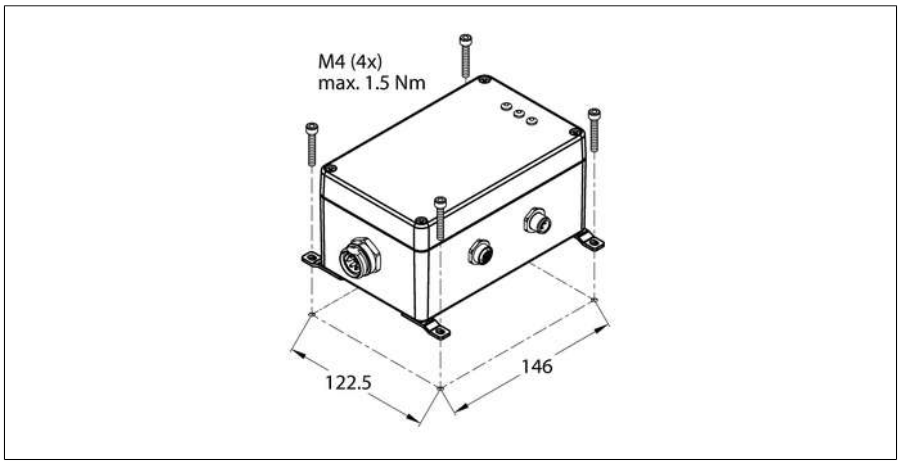

- **Die-cast aluminum housing**
- **7/8" males, 5-pin, for power supply**
- **Electromechanical switch-off box**
- **Voltage V2 disconnected by external safety module via M12 input**
- **Feedback circuit for monitoring by external safety module via M12 output**
- **Disconnection up to PLe in accordance with EN ISO 13849-1 possible**

Type designation	TBSB-L5-CS09
Ident no.	100002112
Supply	
Supply voltage	24 VDC
Admissible range	19.2…27.6 VDC
System power supply	24 VDC
Operating current	9000 mA
Electrical isolation	Galvanic isolation of the voltage groups V1 and V2; voltage resistant up to 500 VDC
Power dissipation, typical	≤ 6 W
Safety Data	
	B10d = 300.000 cycles contactor with nominal load conforming to EN/ISO 13849-1
PL acc. to DIN EN 13849-1:2008	e
Category acc. to DIN EN 13849-1:2008	4
DC acc. to ISO 13849-1:2008	0-99
SIL according IEC 61508	3
Useful Lifetime	20 years
Max. power on time	3600 cyc/h
Connectivity inputs	M12, 5-pin
Connectivity outputs	M12, 5-pol
Standard/Directive conformity	
Directive	2006/42/EC Machine Directive 2014/30/EC EMC Directive 2014/35/EC Low Voltage Directive
Shock test	acc. to EN 60068-2-27
Drop and topple	acc. to IEC 60068-2-31/IEC 60068-2-32
General Information	
Operating temperature	-24…+40 °C
Storage temperature	-24…+50 °C
Altitude	2000 m
Protection class	IP65
Housing material	Die-cast aluminum housing
Material screw	303 stainless steel
Ground label material	Aluminum
Halogen-free	yes
Mounting	Bolted die-cast aluminum housing

Edition • 2020-11-20T09:12:22+01:00

Machine Safety
Switch Box for Disconnecting the Actuator Voltage V 2
TBSB-L5-CS09

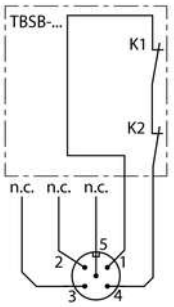	**Note** EDM — feedback circuit	
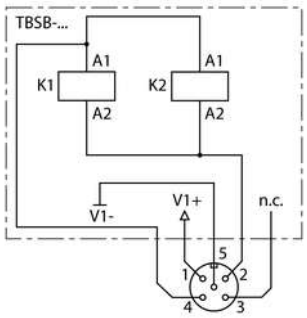	**Note** ES — switch-off circuit for connecting a secure switch-off signal	
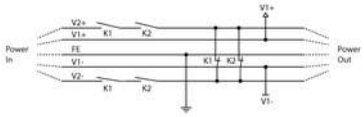	**Note** Operation of the switch-off box, power unit	
	**Note** Pin assignment for 7/8" power supply	

Edition • 2020-11-20T09:12:22+01:00