LVM40A240

LEVEL MONITORING RELAYS, MODULAR VERSION, SINGLE-VOLTAGE. MULTIFUNCTIONS. AUTOMATIC RESETTING, 220...240VAC



Product designation			Level control relay multifunction. Single voltage. Modular version
Product type designation			LVM40
Function			Multifunction: emptying function and alarms filling function and alarms emptying function with priority start-up change control filling function with priority start-up change control well draining and tank filling and alarms
Auxiliary supply			
Supply voltage Type			Single voltage
Rated auxiliary supply voltage Us AC			
	min	VAC	220
	Max	VAC	240
Operating voltage range			0.85...1.1 Us
Rated frequency		Hz	50/60
Power consumption Max		VA	4.5
Power dissipation Max		W	2.8
Output characteristics			
Number of connectable electrodes		N°	5
Type of electrode			Electrode and electrode holders: SN1 / SCM / CGL / PS31 / PS3S or similar
Electrode voltage			10 Vpp
Sensitivity		kohm	2.5…200
Time delay			
Tripping time		s	1
Resetting time		s	1
Probe tripping delay			1…10s
Relay outputs			
Number of relays		N°	2

The characteristics described in this document are subject to updates or modifications at any time. The descriptions, technical and functional information, illustrations and instructions in this brochure are purely illustrative, and are consequently not contractually binding

Relay state			Normally de-energised, energises at tripping
Contact arrangement			1 changeover contact C/O-SPDT + 1 contact NO-SPST
Rated operational voltage AC (IEC)		VAC	250
Maximum switching voltage		VAC	400
IEC Conventional free air thermal current Ith		A	8
UL/CSA and IEC/EN 60947-5-1 designation			B300
Electrical life (with rated load)		cycles	105
Mechanical life		cycles	30x106
Indications			
Indication			1 green LED indicator for power on 2 red LEDs for relay state 2 red LEDs for probe state
Connections			
Tightening torque for terminals			
	max	Nm	0.8
	max	Ibin	7
Conductor cross section			
AWG/Kcmil			
	min	AWG	24
	Max	AWG	12
IEC			
	min	mm²	0.2
	Max	mm²	4
Insulations			
Rated insulation voltage Ui		V	415
Rated impulse withstand voltage Uimp		kV	6
Operating frequency withstand voltage		kV	4
Double insulation Supply / relay / electrode		VAC	≤250
Ambient conditions			
Temperature			
Operating temperature			
	min	°C	-20
	max	°C	+60
Storage temperature			
	min	°C	-30
	max	°C	+80
Housing			
Execution			Modular
N° of modules			3
Material			Self-extinguishing polyamide

The characteristics described in this document are subject to updates or modifications at any time. The descriptions, technical and functional information, illustrations and instructions in this brochure are purely illustrative, and are consequently not contractually binding

Mounting		35mm DIN rail (IEC/EN 60715) or by screws using extractable clips
IEC degree of protection		IP40 on front / IP20 on terminals
Dimensions (W x H x D)	mm	53.5 x 104.7 x 64.9
Weight	g	278

Dimensions

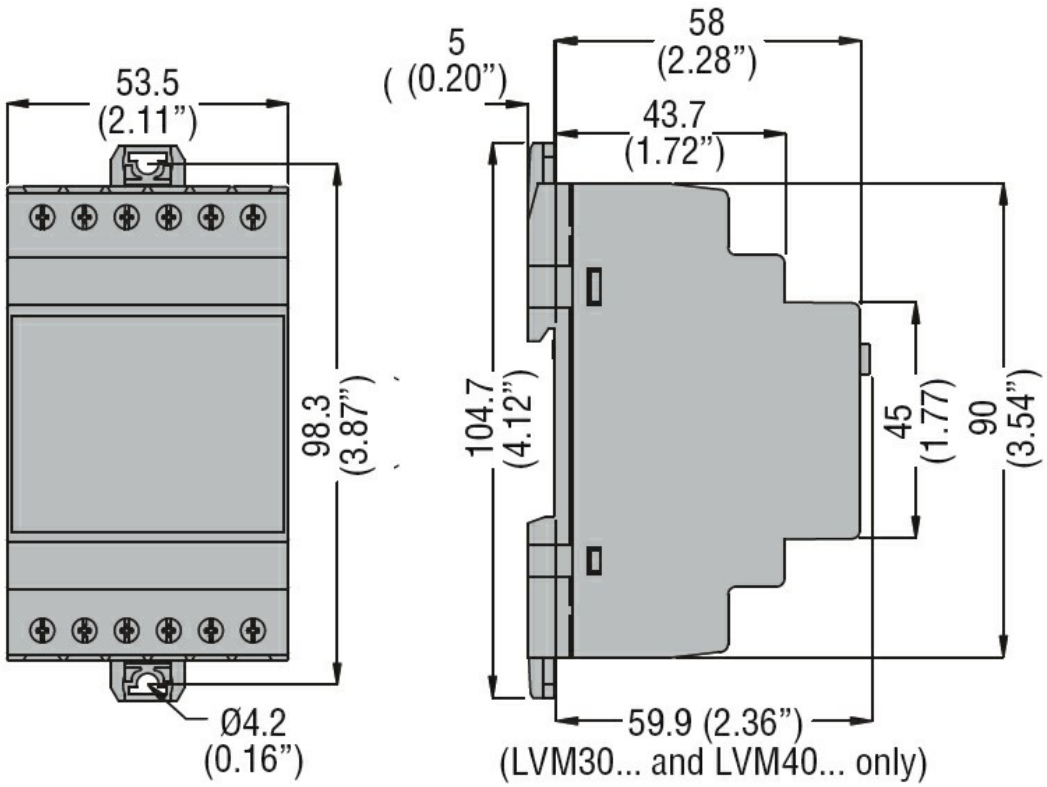

Wiring diagrams

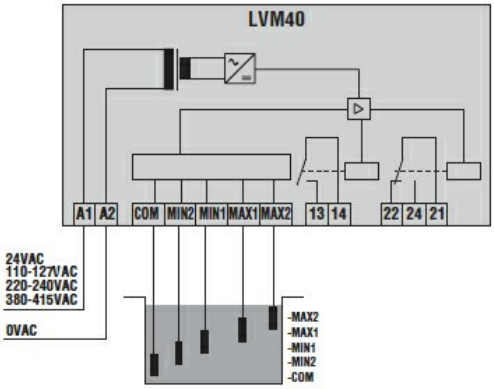

Certifications and compliance

Compliance

CSA C22.2 n° 14
IEC/EN 60255-5
IEC/EN 61000-6-2
IEC/EN 61000-6-3
UL508

The characteristics described in this document are subject to updates or modifications at any time. The descriptions, technical and functional information, illustrations and instructions in this brochure are purely illustrative, and are consequently not contractually binding

Certificates

cULus
EAC

The characteristics described in this document are subject to updates or modifications at any time. The descriptions, technical and functional information, illustrations and instructions in this brochure are purely illustrative, and are consequently not contractually binding