High Power COB LED

① Product line code: COB100W-C & COB100W-W

② Product code base plate

③ Chip code

④ Emitting light colours

⑤ Recommend the minimum Power

⑥ The number of parallel Circuit

⑦ The number of series Circuit

⑧ CRI

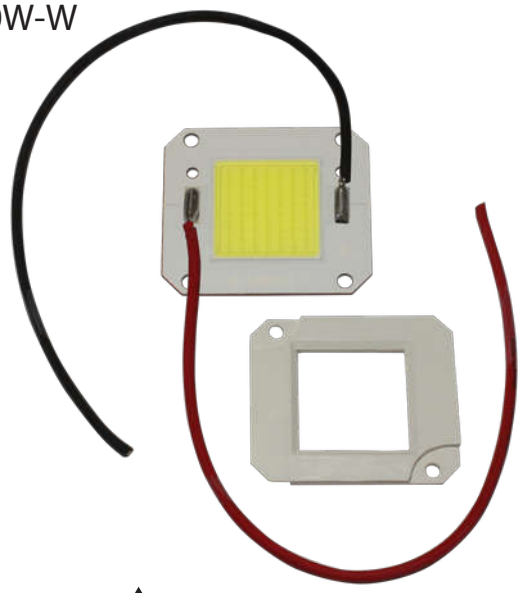



ATTENTION
OBSERVE PRECAUTIONS
FOR HANDLING
ELECTROSTATIC
DISCHARGE
SENSITIVE
DEVICES

2. Features

- Dimension 46mm × 40mm × 2.2mm
- CRI: Ra 70
- Wide viewing angle: 120°
- RoHS compliant (ROHS)
- Manual Soldering 200mm Connection Tails

3. Applications

- Street lights
- Floodlight
- Mining lamp

4.Package Dimensions

Tolerance unless otherwise specified: ±0.3mm.

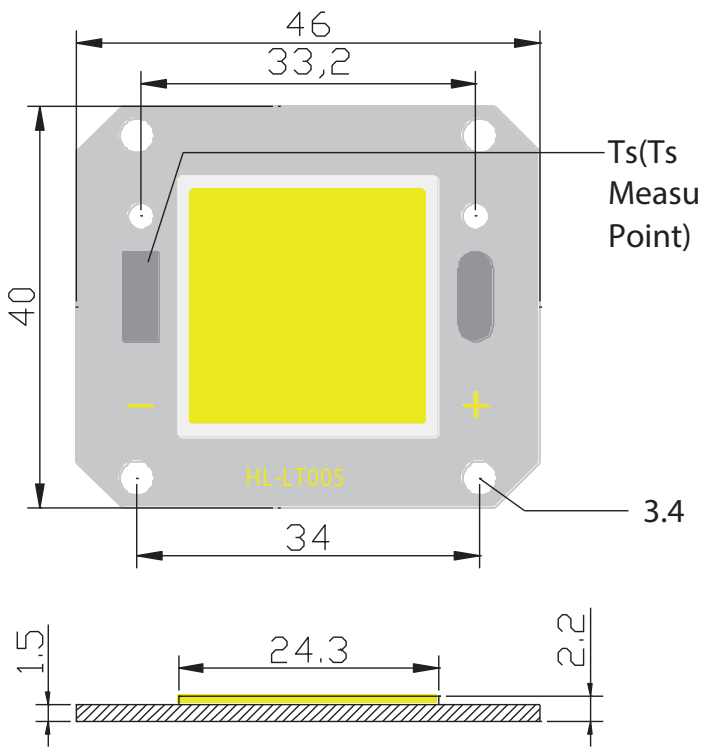

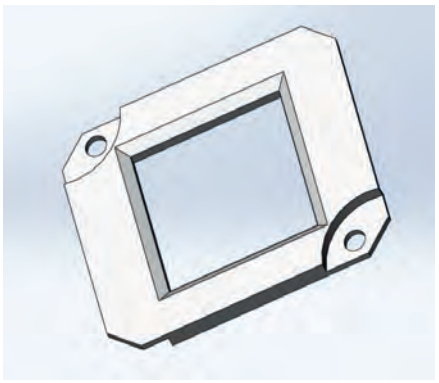

The products supporting PC snaps.

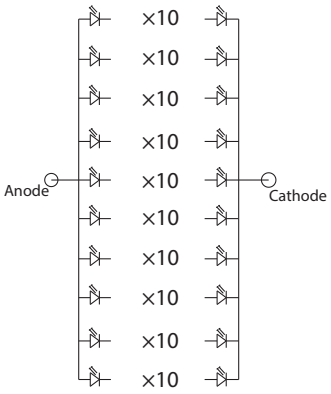

5. Performance

(1) Absolute Maximum Ratings

Parameter	Symbol	Rating Value	Units
Input power	Pi	128	W
Maximum operating current	IF_{max}	4000	mA
Junction Temperature	Tj	115	°C
Operating Temperature Range	Top	-20°C To +85°C	
Storage Temperature Range	Tstg	-40°C To +100°C	
Lead Soldering Temperature *	T_{SOL}	Max. 350°C for 5 sec Max.	

Notes for Table:

1. The temperature of Aluminum PCB do not exceed 85°C.
   If the input power reach 80% max Pi, the temperature of Aluminum PCB should be control below 75°C
2. When hand soldering, keep the temperature of iron below less 350°C less than 5 seconds
3. D.C. Current : $Tj = Ts + Rj\text{-}c \times Pi$

(2) Electro-Optical Characteristics at Tc =25°C

Parameter	Symbol	Condition	Min.	Typ.	Max.	LM/W (typ)	Unit
Forward Voltage	VF	IF=3500mA	30	31.5	34	—	V
Luminous Flux	Φv						Lm
		TC=3000K	10400	11000	13000	100	
		TC=6000 ±300K	11000	12000	14400	110	
CRI	Ra	IF=3500mA	70	—	—	—	—
Thermal Resistance	R(j-c)	IF=3500mA	—	0.25	—	—	℃/W

6.Product bins

Chromaticity bins

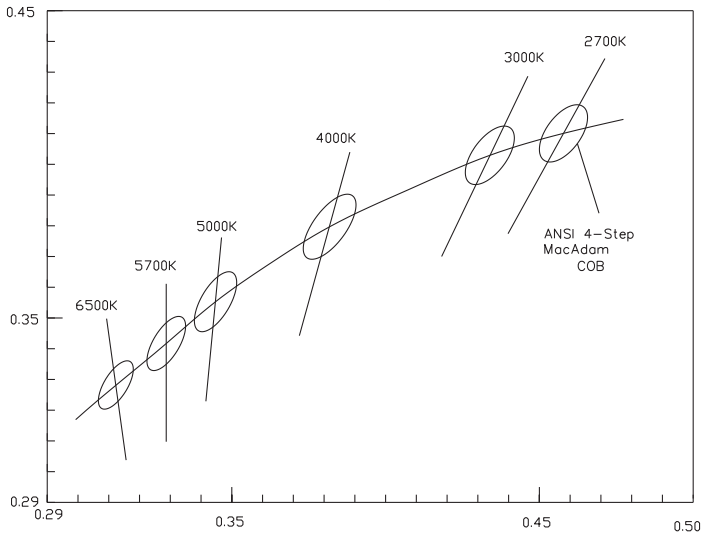

Centre TC	2725K	3045K	3985K	5028K	5665K	6530K
X,Y	0.4578,0.4101	0.4338,0.403	0.3818,0.3797	0.3447,0.3553	0.329,0.3417	0.3123,0.3282

Notes for Table

*1. Colour bins are defined at IF=3500mA operation. If use different forward current, it will cause the change of chromaticity and forward voltage.

*2. The instrument errors of different light source test standards VF+/-3%, Φv+/-10% and Ra+/ -2.

3. Tolerence of ±0.005 on x, y coordinates.

4. Colour region stay within MacAdam "4-step" ellipse from the chromaticity centre. But does not contain the colour temperature 6000 ±300K. The chromaticity centre refers to ANSI C78.377-2008.

7.Characteristics

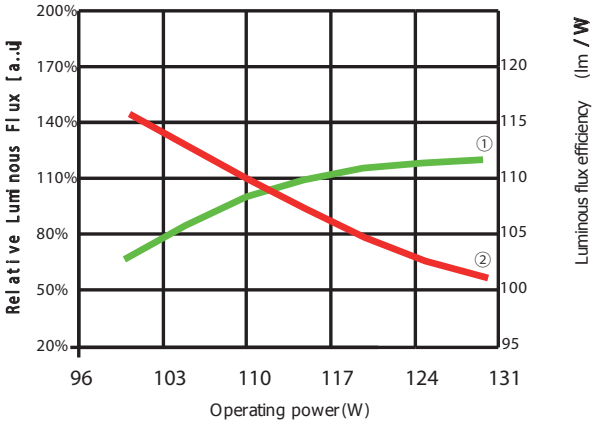

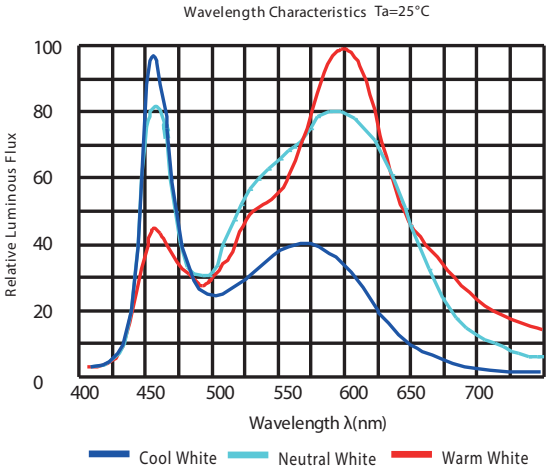

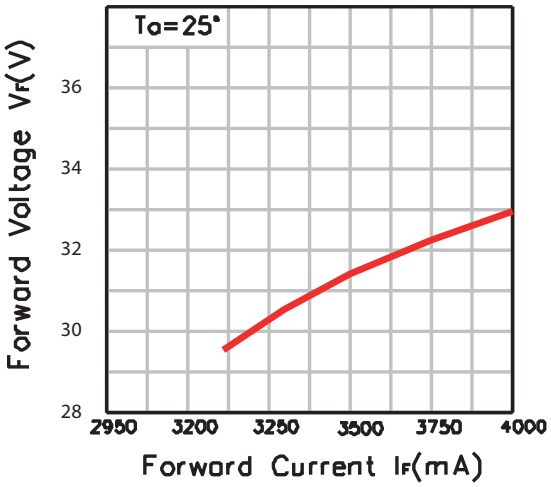

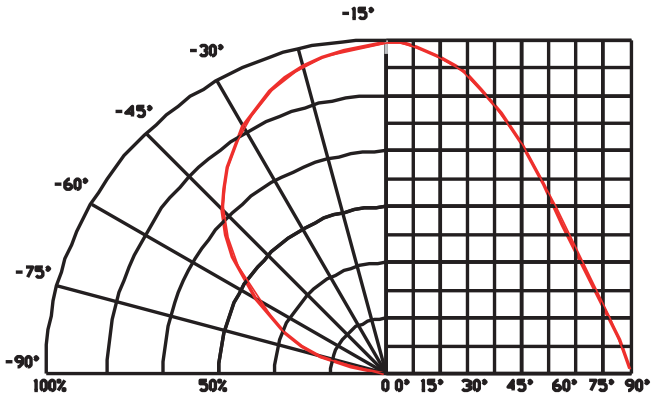

Precaution for use

1. Storage

To avoid moisture, we recommend storage conditions for the unopened LED +5 ~ +30 °C, relative humidity <60%. LED should be used within 168 Hrs. of opening the package.

Please make sure to dehumidify and vacuum pack the remaining/ unused LED.

Dehumidifying condition: +120 ° C ± 5 ° C, 04 Hrs. Effective age for the sealed led is one year.

2. The soldering precautions

Soldering conditions: Reflow soldering is not recommended for this LED. If hand soldering, set soldering iron temperature at 350°C and soldering time not More than 5 seconds, after the first soldering, make sure the substrate surface temperature returns to ambient temperature before a second soldering. Please make sure when soldering, there is no external force on the soldering surface (such as pressure, friction or sharp metal nails, etc.), to avoid gold wire deformation or damage and other abnormalities. If beyond recommended conditions, we cannot guarantee the LED stability, please do the risk assessment first.

3. Anti-Static Measures

Please take adequate measures to prevent electrostatic generation, such as wearing electrostatic ring or anti-static fingerstall etc; any relative products like plant equipment, machinery, carrier and transportation units shall be connected to discharging unit/ ground. The ESD sensitivity of this product is >1000V, after assembly the final lamp, please make sure to discharge Static Electricity by proper ESD equipment.

4. Temperature Control

Recommended temperature conditions for enhanced product life: TS (Cathode Point) is <85°C and glue surface temperature <160°C. During assembly, please ensure that a good quality thermal paste is applied and distributed evenly over the surface. While using thermal pad (Heat Sink), make sure LED is firmly tightened and there is no gap between surfaces. This product Heating conditions, tested at 500V with medium surface contact.

5. The drive control

Drive this product at constant current. Output current range specifications should be according to the operational and other conditions, as mentioned in data sheet. Before using a constant voltage source or altered specifications other than recommended, please consider risk factors.

6. Other

Product is not suitable to use in following conditions

-Direct or indirect wet / damp conditions, such as rain, etc.;

-In contact with sea water and erosive materials

-Exposed to corrosive gases (e.g., Cl2, H2S, NH3, SOx, NOx, etc.);

-Exposed to dust, liquids or oils;



OK



NG