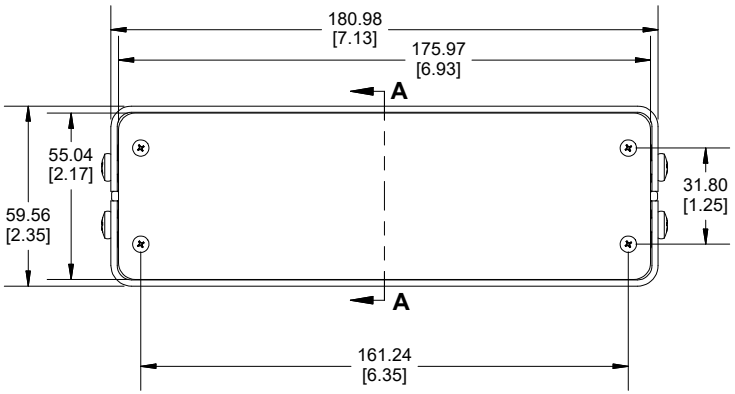

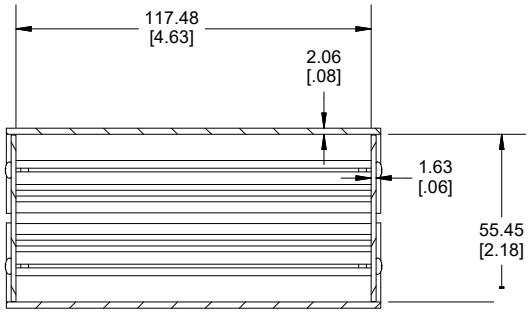

SECTION A-A

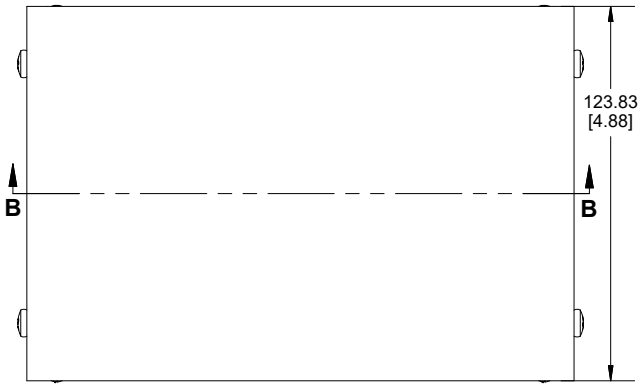

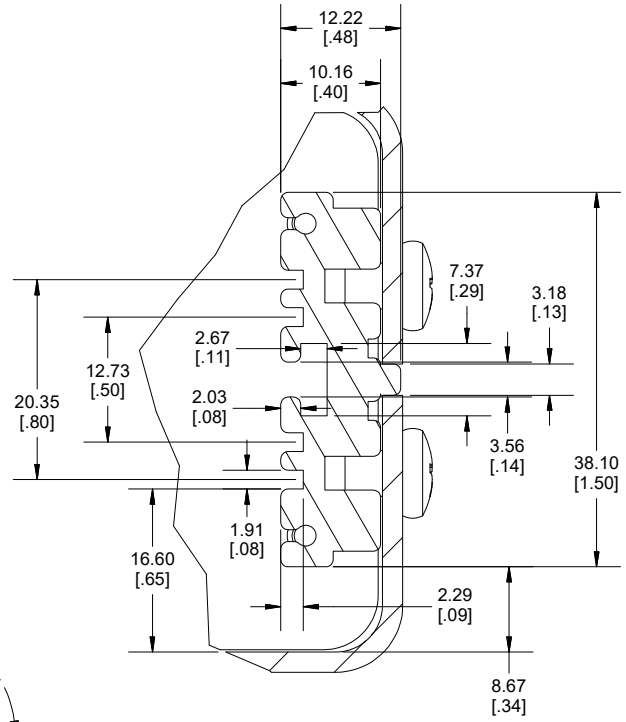

DETAIL C
SCALE 1.3

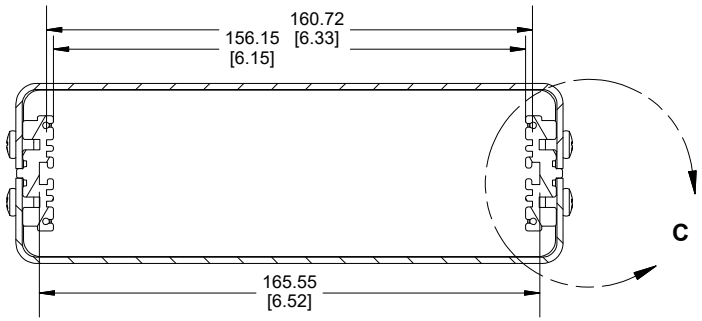

SECTION B-B

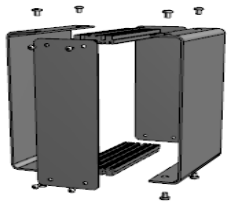

Enclosures can be Factory Modified (Milling, Drilling, Printing etc.)
Contact Factory (modshop@hammfg.com) for quotes
Solid models of this enclosure available in .stp or .x_t
(Part number and text placement/orientation on our products are subject to change, we do not recommend using them as a locating reference for modification purposes)

NOTE
Purchased assembly includes base, cover, end panels, extrusions, cover screws, panel screws and rubber feet.
Recommended Cover screw torque -- 14-15 lbf-in (160-170 cN-m)
1402
1402B Regular Enclosure
BASE: 12 ga. Aluminum (beige) (Pkg 2)
PANEL: 14 ga. Aluminum (natural) (Pkg 2)
Extrusion: Aluminum (natrual) (Pkg 2)
Cover screws: (#10-32 X 1/4" self tap) (Pkg 8)
Panel screws: (#4-24 X 1/4" self tap) (Pkg 18)
Self Adhesive Rubber feet (Pkg 4)

Dimensions:
mm
[inches]

HAMMOND MANUFACTURING®
1402B
www.hammondmfg.com

REV: 05.05.2020