

SIRCO M UL 508

Load break switches standards UL and CSA
from 16 to 100 A

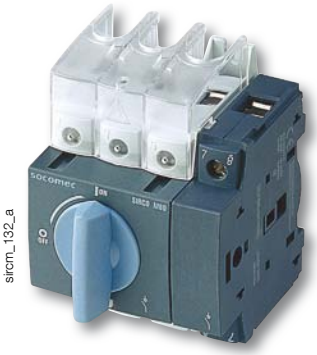

Rotary switch
***SIRCO M** 3 x 80 A*



Toggle switch
***SIRCO M** 3 x 80 A + 2 auxiliary contacts*



Rotary switch
***SIRCO M** 3 x 80 A*

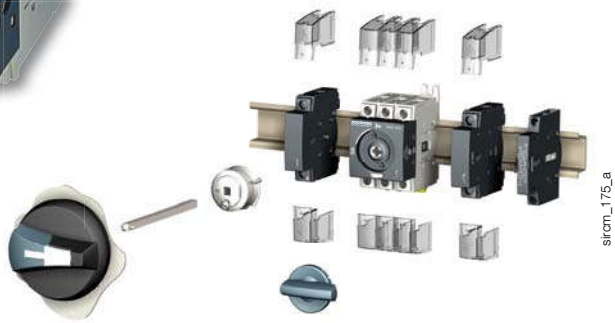

Function

SIRCO M UL/CSA are compact and modular non-fusible disconnect switches. They make and break under all types of load conditions and provide safe isolation for any low voltage circuit, especially for machine control circuits.

General characteristics

- Positive break indication.
- Direct or external operation.
- Compact footprint.
- DIN-rail or base mounting.
- Wide range of accessories.
- Up to 8 pole or 4 pole MTS.



The solution for

> Industrial control systems



Strong points

> Positive break indication
> Direct or external operation
> Compact footprint
> DIN-rail or base mounting
> Wide range of accessories
> Up to 8 pole or 4 pole MTS

Conformity to standards(1)

> IEC 60947-3
> UL 508 listed, Guide NLRV, File E173959
> CSA C22.2§14, class 3211-05, File 112964

(1) Product reference on request.

UL 508 non-metallic polycarbonate 4.4x enclosed SIRCO M

> Enclosed SIRCO M switches allow safe control and disconnection of any motor application.



socomec Innovative Power Solutions

UL 508 manual motor controller “Suitable as motor disconnect”

References

Rating (A)	No. of poles	Toggle switch (direct handle included)	Rotary switch	Direct handle	External front and right side handles[4]	Shaft for external handles	Switched fourth pole module	Auxiliary contacts	Terminal shrouds	Door mounting kit
16 A	3 P	2205 **3000**	2200 **3000**	Blue 2299 **5012**	S00 type I - 0 Black 3R, 12[1] 1473 **1111** Red/Yellow 3R, 12[1] 1474 **1111** Black 4, 4X[1] 147D **1111** Red/Yellow 4, 4X[1] 147E **1111** S0 type I - 0 Black 1, 3R, 12[1] 1483 **1111** Red/Yellow 1, 3R, 12[1] 1484 **1111** Black 4, 4X[1] 148D **1111** Red/Yellow 4, 4X[1] 148E **1111**	S00/S0 type 150 mm 5.9 in 1407 **0515** 200 mm 7.9 in 1407 **0520** 320 mm 12.6 in 1407 **0532**[2]	1 P 2200 **1000**	M type 1 AC NO + NC 2299 **0001** 1 AC 2 NC 2299 **0011**	1 P 2294 **1005**[3] 3 P 2294 **3005**[3]	2299 **3409**
20 A	3 P	2205 **3001**	2200 **3001**				1 P 2200 **1001**			
25 A	3 P	2205 **3002**	2200 **3002**				1 P 2200 **1002**			
32 A	3 P	2205 **3003**	2200 **3003**				1 P 2200 **1003**			
40 A	3 P	2205 **3004**	2200 **3004**				1 P 2200 **1004**			
63 A	3 P	2205 **3006**	2200 **3006**				1 P 2200 **1006**		1 P 2294 **1009**[3] 3 P 2294 **3009**[3]	
80 A	3 P	2205 **3008**	2200 **3008**				1 P 2200 **1008**			
100 A CD	3 P	2205 **3009**	2200 **3009**				1 P 2200 **1009**			

(1) Nema/UL type.
(2) Please order the shaft guide: 1419 0000 with the shaft.
(3) Top and bottom.
(4) There is no door interlocking when the switch is fitted on the side of the enclosure.

SIRCO M UL 508

Load break switches standards UL and CSA
from 16 to 100 A

UL 508 non-metallic polycarbonate 4, 4X enclosed SIRCO M



coff_368_a_1_cat

Function

Enclosed **SIRCO M** switches allow safe control and disconnection of any motor application.

General characteristics

- Grey enclosure with red handle.
- Equipped with a 3 pole SIRCO M.
- 1 removable ground terminal.
- Possibility of adding 1 power pole and 1 auxiliary contact.
- Nema/UL type 1, 3R, 12, 4, 4X.

Conformity to standards(1)

- IEC 60947-3
- UL 508, Guide NLRV, file E173959
- CSA C22.2#14, Class 3211-05, file 702154

(1) Product reference on request.

References

Rating (A)	No. of poles	Enclosed switches	Enclosure size	Switched fourth pole module	Unswitched neutral pole	Unswitched protective ground module	Auxiliary contacts	Terminal shrouds
32 A	3 P	2214 **3503**	Size 1	1 P 2200 **1003**	1 P 2200 **5005**(1)	1 P 2200 **9005**(1)	M type 1 AC NO + NC 2299 **0001**	1 P 2294 **1005**(2) 3 P 2294 **3005**(2)
	3 P	2224 **3503**	Size 2					
63 A	3 P	2224 **3506**	Size 2	1 P 2200 **1006**(1)	1 P 2200 **5009**(1)	1 P 2200 **9009**(1)	1 AC 2 NC 2299 **0011**	1 P 2294 **1009**(2) 3 P 2294 **3009**(2)

(1) Not UL.
(2) Top and bottom.

Configuration

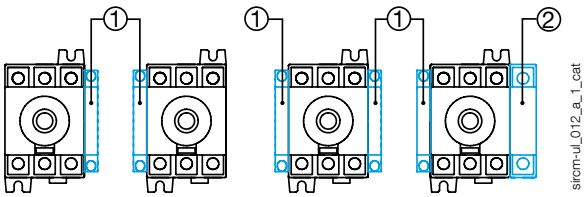

sircm-ul_012_a_1_cat

Configuration of the auxiliary contacts for enclosed SIRCO M.
1. M type auxiliary contacts.
2. Additional pole.

Dimensions (in / mm)

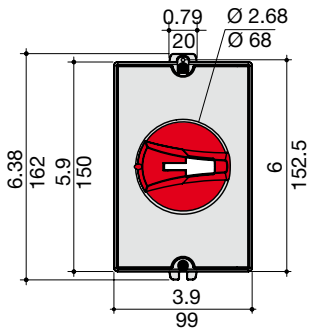

Size 1

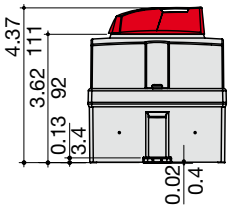

sircm-ul_007_a_1_x_cat

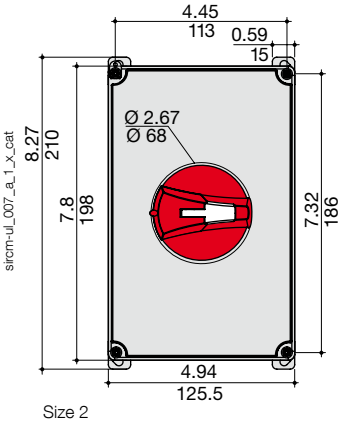

Size 2

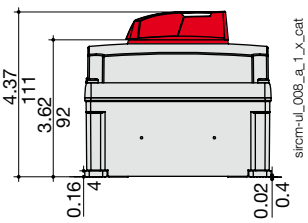

sircm-ul_008_a_1_x_cat

socomec Innovative Power Solutions

Accessories

Direct operation handle

Rating (A)	Handle color	Handle type	Reference
16 ... 100 CD	Blue	M00	2299 **5012**

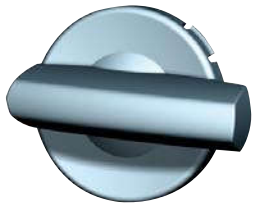

M00 handle

External operation handle

Use

The handle locking function prevents the user from opening the door of the enclosure when the switch is in the "ON" position (only if the handle is fitted on the door).

Opening the door when the switch is in the "ON" position is possible by defeating the interlocking function with the use of a tool (authorised persons only). The interlocking function is restored when the door is closed. The handle is padlockable with 3 padlocks.

Front and right side handles I - 0

Rating (A)	Handle color	Handle type	Nema/UL type	Standard Reference	Heavy duty Reference
16 ... 100 CD	Black	S00	3R, 12	1473 **1111**	
16 ... 100 CD	Red/Yellow	S00	3R, 12	1474 **1111**	
16 ... 100 CD	Black	S00	4, 4X	147D **1111**	
16 ... 100 CD	Red/Yellow	S00	4, 4X	147E **1111**	
16 ... 100 CD	Black	S0	1, 3R, 12	1483 **1111**	
16 ... 100 CD	Red/Yellow	S0	1, 3R, 12	1484 **1111**	
16 ... 100 CD	Black	S0	4, 4X	148D **1111**	
16 ... 100 CD	Red/Yellow	S0	4, 4X	148E **1111**	
16 ... 100 CD	Black	S01	3R, 12	140F **2111**	
16 ... 100 CD	Red/Yellow	S01	3R, 12	140G **2111**	
16 ... 100 CD	Black	S01	4, 4X	140D **2111**	140D **2911**
16 ... 100 CD	Red/Yellow	S01	4, 4X	140E **2111**	140E **2911**

(1) Not UL.

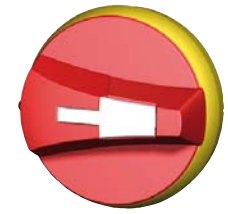

S00 handle



S0 handle



S01 handle

Front handle for transfer switches I - 0 - II

Rating (A)	Handle color	Handle type	Nema/UL type	Reference
16 ... 100 CD	Black	S00	IP65	1473 **1113**(1)

Front handle for transfer switches I - I+II - II

Rating (A)	Handle color	Handle type	Nema/UL type	Reference
16 ... 100 CD	Black	S00	IP65	1473 **1114**(1)

Shafts for external handle

Use

Standard lengths:
- 150 mm,
- 200 mm,
- 320 mm.

Other lengths: please consult us.

For 3/4 pole switches, shaft extensions for external front and side handle.

For 6/8 pole switches and SIRCOVER M transfer switches.



For 3/4 pole

Ratg (A)	Handle type	Length (in)	Length (mm)	Reference
16 ... 100 CD	S00	5.9	150	1407 **0515**
16 ... 100 CD	S00	7.9	200	1407 **0520**
16 ... 100 CD	S00	12.6	320	1407 **0532**
16 ... 100 CD	S01	7.9	200	1404 **0520**
16 ... 100 CD	S01	12.6	320	1404 **0532**
16 ... 100 CD	S01	15.7	400	1404 **0540**

For 6/8 pole

Rating (A)	Handle type	Length (in)	Length (mm)	Reference
16 ... 100 CD	S00	5.9	150	1407 **0515**
16 ... 100 CD	S00	7.9	200	1407 **0520**
16 ... 100 CD	S00	12.6	320	1407 **0532**

Accessories (continued)

Shaft guide for external handle

Use

This accessory enables handle to engage extension shaft with a misalignment of up to 15 mm.
Required for a shaft lenght from 320 mm.

Handle type	Reference
S00 and S0	1419 **0000**



acces_260_a_2_cat

Additional pole

4th pole

Rating (A)	No. of poles	Type	Reference
16	1 P	switched	2200 **1000**
20	1 P	switched	2200 **1001**
25	1 P	switched	2200 **1002**
32	1 P	switched	2200 **1003**
40	1 P	switched	2200 **1004**
63	1 P	switched	2200 **1006**(1)
80	1 P	switched	2200 **1008**(1)
100 CD	1P	switched	2200 **1009**(1)

(1) Not UL.

Use

Transforms:
- 3 pole SIRCO M load break switch into a 4 pole,
- 3 pole SIRCOVER M transfer switch into a 4 pole.



sircm_072_b_1_cat

Solid neutral pole

Rating (A)	No. of poles	Type	Reference
16 … 40	1 P	unswitched	2200 **5005**(1)
63 … 100 CD	1 P	unswitched	2200 **5009**(1)

(1) Not UL.

Use

Transforms the 3-pole switch into a 3-pole + solid neutral.

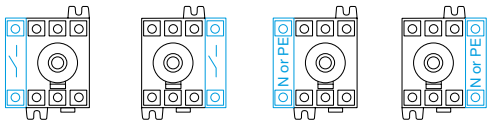

Ground module

Rating (A)	No. of poles	Type	Reference
16 … 40	1 P	unswitched	2200 **9005**(1)
63 … 100 CD	1 P	unswitched	2200 **9009**(1)

(1) Not UL.

Use

Adds 1 protective ground module pole to the load break switch.

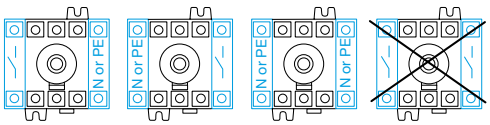

sircm_078_a_1_gb_cat

Terminal shrouds

Use

Top and bottom additional protection against direct contact with the terminals or connection parts.
1 or 3 pole are available.

Perforation on each terminal cover enables remote thermographic inspection without dismantling.

Rating (A)	No. of poles	Position	Reference
16 … 40	1 P	top and bottom	2294 **1005**
16 … 40	3 P	top and bottom	2294 **3005**
63 … 100 CD	1 P	top and bottom	2294 **1009**
63 … 100 CD	3 P	top and bottom	2294 **3009**



sircm_049_a_1_cat

M type Auxiliary Contacts

Use

Pre-break and signaling of positions 0 and I by NO+NC or 2 NO Auxiliary Contacts.
They can be mounted on the left or on the right side of the device.

Max 4 Auxiliary Contacts per product (2 modules).

Characteristics

A300.

Rating (A)	No. of AC	AC type	Reference
16 ... 100 CD	1 AC	NO + NC	2299 **0001**
16 ... 100 CD	1 AC	2 NO	2299 **0011**


sircm_075_b_2_cat

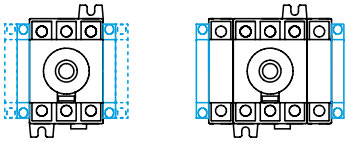
sircm_081_a_1_x_cat

Auxiliary contacts configurations for SIRCO M

Conversion kit

Use

These accessories enable the assembly of 2 switches in order to achieve:
- 6 or 8 pole switches
- 3 or 4 pole open or close transition transfer switches.

Rating (A)	Type[1]	Reference
16 ... 100 CD	Load break switches 6/8 pole	2269 **6009**
16 ... 100 CD	Transfer switch 3/4 pole (I - 0 - II)	2209 **6009**
16 ... 100 CD	Transfer switch 3/4 pole (I - I+II - II)	2299 **6009**

(1) Non UL.


sircm_050_c_2_cat


sircm_097_b_2_x_cat

Conversion kit for 6 or 8 pole load break switches

Conversion kit for 3 and 4-pole transfer switches (I - 0 - II) or (I - I+II - II)


sircm_086_b_1_cat

Door mounting kit

Use

This kit enables direct mounting of the switch on the panel door or on the right or left side of the panel with S00 and S0 handles.

The S0 and S00 external handles are quick and easy to install due to an internal locking nut mounted on the inside of the enclosure.

Rating (A)	No. of poles	Reference
16 ... 100 CD	3/4 P	2299 **3409**

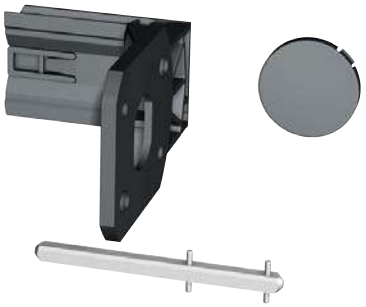
sircm_051_b_2_cat

Characteristics

Characteristics according to UL 508 / CSA22.2#14 suitable as motor disconnect

General use rating (A)	16 A	20 A	25 A	32 A	40 A	63 A	80 A	100 A CD
Short circuit rating at 600 VAC (kA)	65	65	65	65	10/65	50/65	50/65	50/65
Type of fuse	J	J	J	J	J	J	J	J
Max fuse rating (A)	30	30	30	30	60/30	100/60	100/60	100/60
Max. motor hp / FLA 3 ph motor max.								
208 VAC	3/0.6	5/16.7	7.5/24.2	7.5/24.2	7.5/24.2	15/46.2	15/46.2	15/46.2
220-240 VAC	5/15.2	5/15.2	7.5/22	7.5/22	7.5/22	20/54	20/54	20/54
440-480 VAC	10/14	10/14	15/21	20/27	20/27	40/52	40/52	40/52
600 VAC	10/11	15/17	20/22	25/27	25/27	40/41	40/41	40/41
Connection terminals								
Solid - 1 wire	#14 - #10	#14 - #10	#14 - #10	#14 - #10	#14 - #10	#14 - #10	#14 - #10	#14 - #10
Solid - 2 wires	2 x #12	2 x #12	2 x #12	2 x #12	2 x #12	2 x #12	2x #12	2x #12
Stranded - 1 wire	#14 - #4	#14 - #4	#14 - #4	#14 - #4	#14 - #4	#14 - #1	#14 - #1	#14 - #1
Stranded - 2 wires	2 x (#14 - #12)	2 x (#14 - #12)	2 x (#14 - #12)	2 x (#14 - #12)	2 x (#14 - #12)	2 x (#10 - #6)	2 x (#10 - #6)	2 x (#10 - #6)
Auxiliary contacts								
Electrical characteristics	A300	A300	A300	A300	A300	A300	A300	A300
Mechanical characteristics								
Endurance (number of operating cycles)	10 000	10 000	10 000	10 000	10 000	10 000	10 000	10 000
Operating torque (lbs.in / Nm)	7/0.8	7/0.8	7/0.8	7/0.8	7/0.8	8.9/1	8.9/1	8.9/1

Characteristics according to IEC 60947-3

Thermal current I_{th} (40°C)		**16 A**	**20 A**	**25 A**	**32 A**	**40 A**	**63 A**	**80 A**	**100 A CD**
Rated insulation voltage U_i (V)		800	800	800	800	800	800	800	800
Rated impulse withstand voltage U_{imp} (kV)		8	8	8	8	8	8	8	8
Rated operational currents I_e (A)									
Rated voltage	**Utilization**								
415 VAC	AC-23 A/AC-23 B	16/16	20/20	25/25	32/32	40/40	63/63	80/80	80/80
500 VAC	AC-22 A/AC-22 B	16/16	20/20	25/25	32/32	40/40	63/63	80/80	-
500 VAC	AC-23 A/AC-23 B	16/16	20/20	25/25	25/25	25/25	63/63	63/63	-
690 VAC	AC-21 A/AC-21 B	16/16	20/20	25/25	32/32	40/40	63/63	80/80	100/100
690 VAC	AC-22 A/AC-22 B	16/16	20/20	25/25	32/32	32/40	40/63	63/80	-
690 VAC	AC-23 A/AC-23 B	16/16	20/20	25/25	25/25	25/25	40/40	40/40	-
Operational power in AC-23 (kW)									
At 400 VAC without prebreaking AC in AC-23 (kW)(1)(2)		7.5	9	11	15	18.5	30	37	-
At 500 VAC without prebreaking AC in AC-23 (kW)(1)(2)		7.5	9	11	15	15	30	37	-
At 690 VAC without prebreaking AC in AC-23 (kW)(1)(2)		7.5	11	15	18.5	18.5	30	37	-
Fuse protected short-circuit withstand (kA rms prospective)									
Prospective short-circuit current (kA rms)(3)		50	50	50	50	50	50	50	25
Associated fuse rating (A)(3)		16	20	25	32	40	63	80	100
Overload capacity (U_e 415 VAC)									
Rated short-time withstand current 0.3 s. I_{CW} (kA rms)(3)		2.5	2.5	2.5	2.5	2.5	3	3	1.5
Rated short-circuit making capacity I_{cm} (kA peak)(3)		6	6	6	6	6	9	9	2.1
Connection									
Minimum Cu cable cross section (mm^2)		1.5	1.5	1.5	1.5	1.5	2.5	2.5	2.5
Maximum Cu cable section (mm^2)		16	16	16	16	16	35	35	35
Tightening torque min/max (Nm)		2/2.2	2/2.2	2/2.2	2/2.2	2/2.2	3.5/3.85	3.5/3.85	3.5/3.85

(1) A/B: Category with index A = frequent operation - Category with index B = infrequent operation.
(2) The power value is given for information only, the current values vary from one manufacturer to another.
(3) For a rated operating voltage U_e = 400 VAC.

Dimensions (in/mm)

16 to 100 A

Toggle operation

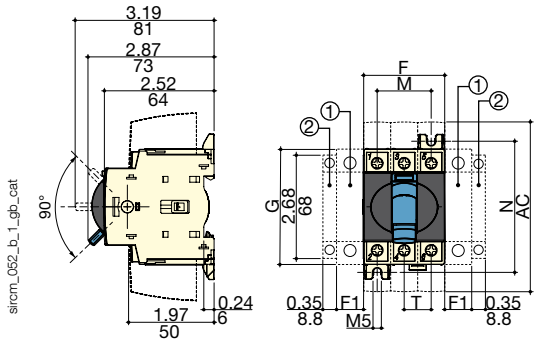

Direct operation with handle

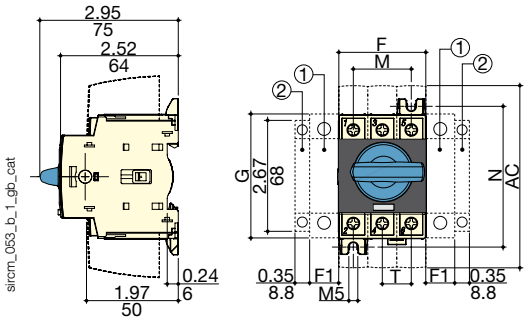

1. Position for 1 switched fourth pole module (1 per device max.) **or** 1 unswitched neutral pole **or** 1 protective ground module **or** 1 auxiliary contact.
2. Position for 1 auxiliary contact only.

Note: Maximum of 4 additional blocks.

External front handle

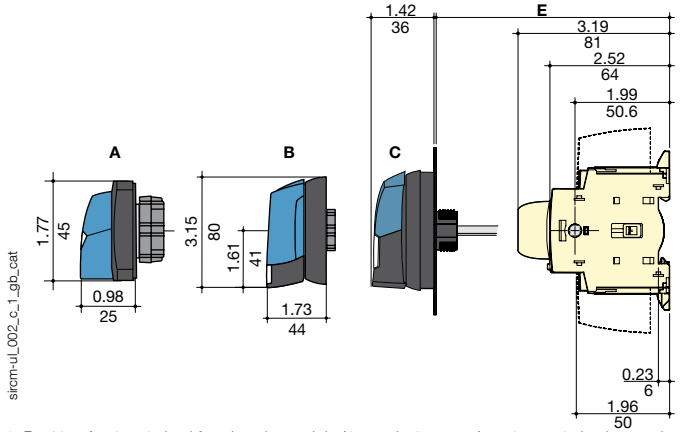

External side handle

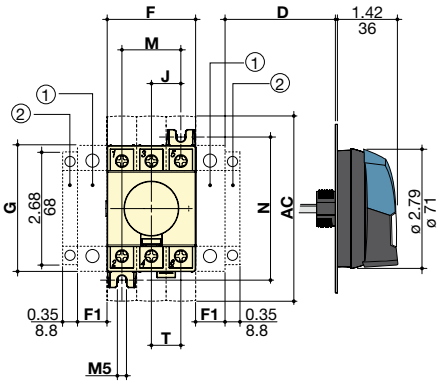

1. Position for 1 switched fourth pole module (1 per device max.) **or** 1 unswitched neutral pole **or** 1 ground module **or** 1 auxiliary contact.
2. Position for 1 auxiliary contact only.

Note: Maximum of 4 additional blocks.

Rating (A)	Units	Overall dimensions				Terminal shrouds	Switch body				Switch mounting		Connection
		D min	D max	E min	E max	AC	F	F1	G	J	M	N	T
16 … 40	in	1.18	9.25	3.94	14.64	4.33	1.77	0.59	2.67	0.59	1.18	2.95	0.59
	mm	30	235	100	372	110	45	15	68	15	30	75	15
63 … 100 CD	in	1.18	9.25	3.93	14.64	4.33	2.06	0.69	2.99	0.69	1.38	3.35	0.69
	mm	30	235	100	372	110	52.5	17.5	76	17.5	35	85	17.5

Direct front handle for 6/8-pole load break switches
or 3/4-pole transfer switches

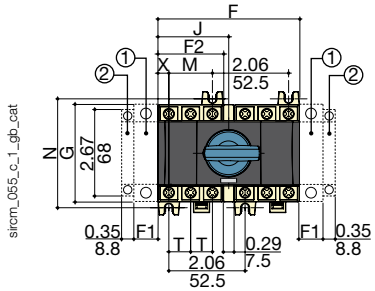

External front handle for 6/8-pole load break switches
or 3/4-pole transfer switches

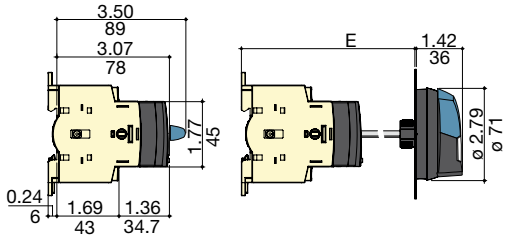

1. Position for 1 switched fourth pole module (1 per device max.) **or** 1 unswitched neutral pole **or** 1 ground module **or** 1 auxiliary contact.
2. Position for 1 auxiliary contact only.

Note: Maximum of 4 additional blocks.

Rating (A)	Units	Overall dimensions		Switch body					Switch mounting		Connection	
		E min	E max	F	F1	F2	G	J	M	N	T	X
16 … 40	in	4.13	14.64	3.83	0.59	1.77	2.67	1.92	1.18	2.95	0.59	0.29
	mm	105	372	97.5	15	45	68	48.75	30	75	15	7.5
63 … 100 CD	in	4.13	14.65	4.13	0.69	2.06	2.99	2.06	1.38	3.35	0.69	0.34
	mm	105	372	105	17.5	52.5	76	52.5	35	85	17.5	8.75

External handles dimensions (in/mm)

16 to 100 A

Handle type	Front operation Direction of operation	Side operation Direction of operation	Door drilling
S00 type			

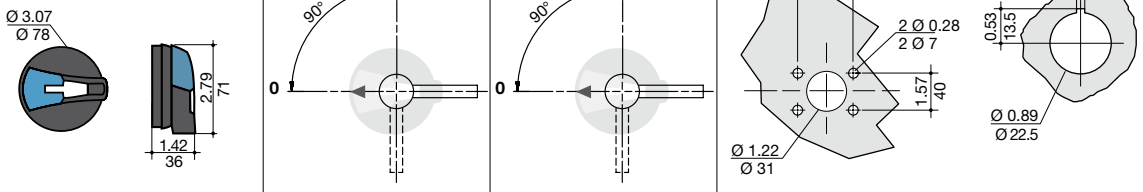

poign_059_c_1_us_cat

Handle type	Front operation Direction of operation	Side operation Direction of operation	Door drilling
S0 type			

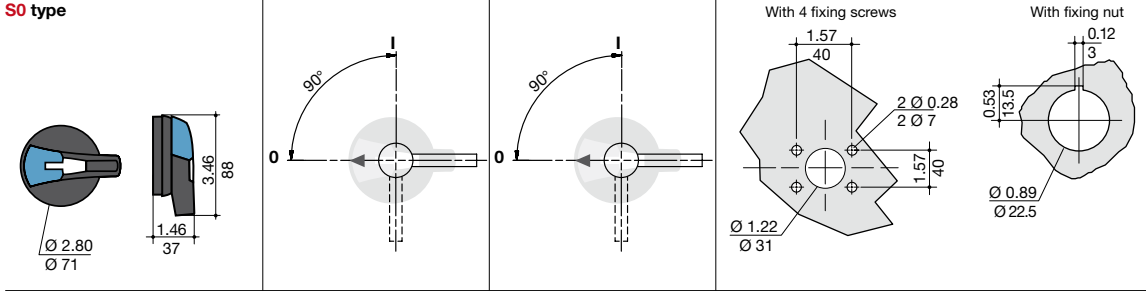

poign_060_a_1_us_cat

Handle type	Front operation Direction of operation	Door drilling
S00 type Transfer switches		

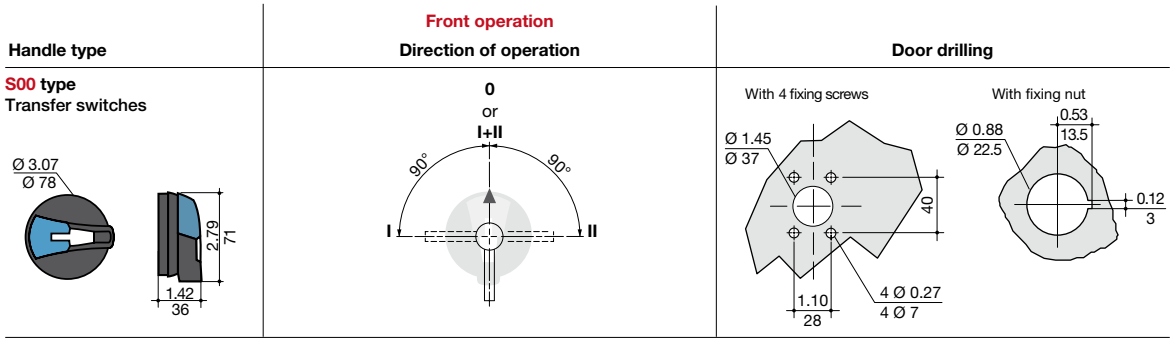

poign_070_a_1_gb_cat

Handle type	Front operation Direction of operation	Side operation Direction of operation	Door drilling
S01 type			

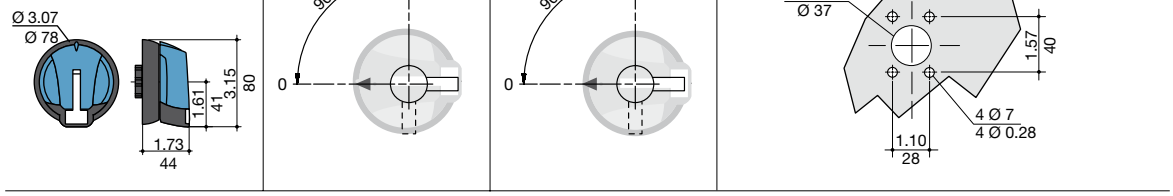

poign_018_a_1_gb_cat