HFD23 SUBMINIATURE SIGNAL RELAY

c UL us
File No.:E133481

CQC
File No.:CQC09002035070

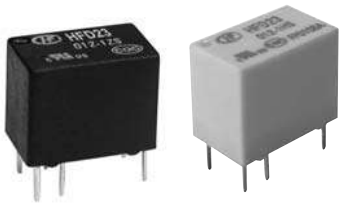

Features

- Max.4A switching capability
- High sensitive: 150mW
- 1 Form C configuration
- Plastic sealed type available
- Environmental friendly product (RoHS compliant)
- Outline Dimensions: (12.5 x 7.5 x 10.0) mm

CONTACT DATA

Contact arrangement	1A	1C
Contact resistance	100mΩ max. (at 10mA 30mVDC)	
Contact material	AgNi +Au plated	
Contact rating (Res. load)	1A 125VAC/2A 30VDC	0.5A 125VAC/1A 30VDC
Max. switching voltage	125VAC / 60VDC	
Max. switching current	4A	2A
Max. switching power	125VA / 60W	62.5VA / 30W
Min. applicable load 1)	1mA 5V	
Mechanical endurance	1 x 10^7OPS	
Electrical endurance 2)	9 x 10^4OPS (1H:1A 125VAC; 1Z:0.5A 125VAC, Resistive load., Room temp., 1s on 9s off)	

Notes: 1) Min. applicable load is reference value. Please perform the confirmation test with the actual load before production since reference value may change according to switching frequencies, environmental conditions and expected contact resistance and reliability.
2) Electric endurance data are collected in the NO or NC contact test.

CHARACTERISTICS

Insulation resistance		1000MΩ (at 500VDC)
Dielectric strength	Between coil & contacts	1000VAC 1min
	Between open contacts	500VAC 1min
Operate time (at nomi. volt.)		5ms max.
Release time (at nomi. volt.)		5ms max.
Temperature rise (at nomi.volt.)		65K max.
Vibration resistance		10Hz to 55Hz 3.3mm DA
Shock resistance	Functional	196m/s^2
	Destructive	980m/s^2
Humidity		5% to 98% RH
Ambient temperature		-40˚C to 70˚C
Unit weight		Approx. 2.2g
Termination		PCB (DIP)
Construction		Plastic sealed

Notes: 1) The data shown above are initial values.
2) UL insulation system: Class A

COIL

Coil power	Sensitive: Approx. 150mW; Standard: Approx. 200mW

COIL DATA at 23˚C

Standard type

Nominal Voltage VDC	Pick-up Voltage VDC max.	Drop-out Voltage VDC min.	Max. Voltage VDC	Coil Resistance Ω
1.5	1.20	0.15	2.25	11.3 x (1±10%)
2.4	1.92	0.24	3.6	28.8 x (1±10%)
3	2.40	0.30	4.5	45 x (1±10%)
3.5	3.60	0.45	5.75	101.3 x (1±10%)
5	4.00	0.50	7.5	125 x (1±10%)
6	4.80	0.60	9.0	180 x (1±10%)
9	7.20	0.90	13.5	405 x (1±10%)
12	9.60	1.20	18.0	720 x (1±10%)
24	19.20	2.40	36.0	2880 x (1±15%)

Sensitive type

Nominal Voltage VDC	Pick-up Voltage VDC max.	Drop-out Voltage VDC min.	Max. Voltage VDC	Coil Resistance Ω
1.5	1.20	0.15	2.25	15 x (1±10%)
2.4	1.90	0.24	3.6	38.4 x (1±10%)
3	2.40	0.30	4.5	60 x (1±10%)
4.5	3.60	0.45	5.75	135 x (1±10%)
5	4.00	0.50	7.5	167 x (1±10%)
6	4.80	0.60	9.0	240 x (1±10%)
9	7.20	0.90	13.5	540 x (1±10%)
12	9.60	1.20	18.0	960 x (1±10%)
24	19.20	2.40	36.0	3840 x (1±15%)

Notes: 1) When user's requirements can't be found in the above table, special order allowed.
2) In case 5V of transistor drive circuit, it is recommended to use 4.5V type relay, and 3V to use 2.4V type relay.

SAFETY APPROVAL RATINGS

UL/CUL	1H type: 1A 30VDC 2A 30VDC 1A 125VAC	1Z type: 1A 30VDC 0.3A 60VDC 0.5A 125VAC

Notes: 1) All values unspecified are at room temperature.
2) Only typical loads are listed above. Other load specifications can be available upon request.

ORDERING INFORMATION

	HFD23 /	012	-1Z	S	(XXX)
Type					
Coil voltage	1.5, 2.4, 3, 4.5, 5, 6, 9, 12, 24VDC				
Contact arrangement	**1H**: 1 Form A **1Z:** 1 Form C				
Coil power	**S:** Sensitive type **P:** Standard type				
Special code[2)]	**XXX:** Customer special requirement **Nil:** Standard				

Notes: 1) Contact is recommended for suitable condition and specifications if water cleaning or surface process is involved in assembling relays on PCB.

2) The customer special requirement express as special code after evaluating by Hongfa.

OUTLINE DIMENSIONS, WIRING DIAGRAM AND PC BOARD LAYOUT

Unit: mm

Outline Dimensions

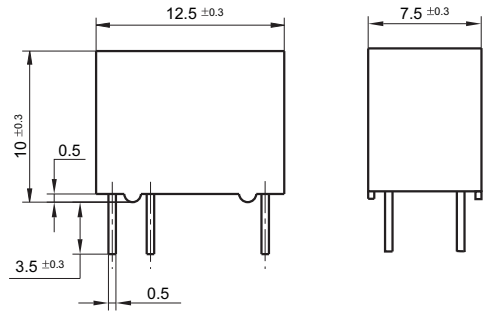

Wiring Diagram
(Bottom view)

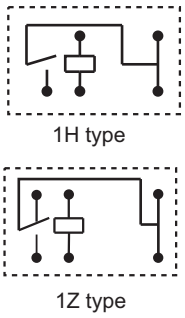

PCB Layout
(Bottom view)

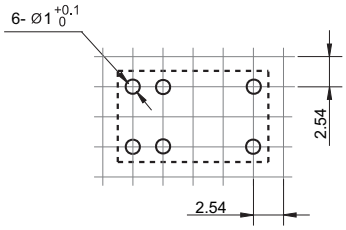

Remark: 1) In case of no tolerance shown in outline dimension: outline dimension ≤1mm, tolerance should be ±0.2mm; outline dimension >1mm and ≤5mm, tolerance should be ±0.3mm; outline dimension >5mm, tolerance should be ±0.4mm.

2) The tolerance without indicating for PCB layout is always ±0.1mm.

3) The width of the gridding is 2.54mm.

CHARACTERISTIC CURVES

MAXIMUM SWITCHING POWER

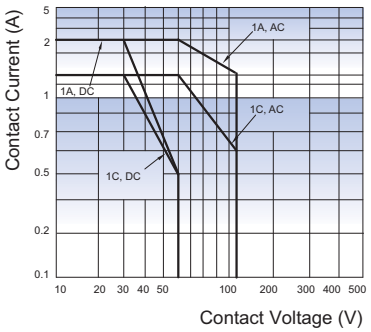

ENDURANCE CURVE

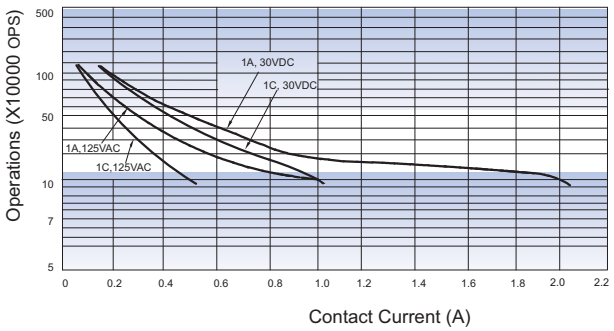

Test conditions:
Resistive load, Room temp., 1s on 9s off.

Notice

1) To avoid using relays under strong magnetic field which will change the parameters of relays such as pick-up voltage and drop-out voltage.
2) The relay may be damaged because of falling or when shocking conditions exceed the requirement.
3) Contact is recommended for suitable condition and specifications if water cleaning or surface process is involved in assembling relays on PCB.
4) Regarding the plastic sealed relay, we should leave it cooling naturally untill below 40°C after welding, then clean it and deal with coating, remarkably the temperature of solvents should also be controlled below 40°C.Please avoid cleaning the relay by ultrasonic, avoid using the solvents like gasoline, Freon, and so on, which would affect the configuration of relay or influence the environment.
5) Energizing coil with rated voltage is basic for normal operation of a relay, please make sure the energized voltage to relay coil have reached the rated voltage. Regarding latching relay, in order to maintain the "set" or "reset" status, impulse width of the rated voltage applied to coil should be more than 5 times of "set" or "reset" time.
6) About preferable condition of operation, storage and transportation, please refer to "Explanation to terminology and guidetines of relay".

Disclaimer

The specification is for reference only. See to "Terminology and Guidelines" for more information. Specifications subject to change without notice. We could not evaluate all the performance and all the parameters for every possible application. Thus the user should be in a right position to choose the suitable product for their own application. If there is any query, please contact Hongfa for the technical service. However, it is the user's responsibility to determine which product should be used only.

© Xiamen Hongfa Electroacoustic Co., Ltd. All rights of Hongfa are reserved.