Operating manual

DV6318/2TDH5P



Product type, manufacturing date (calendar week/year of construction) and if required, conformity mark can be found on the nameplate on the product.
Please provide us with the contents of the nameplate when making enquiries about the product.

ebm-papst St.Georgen GmbH & Co. KG
Hermann-Papst-Straße 1
D - 78112 St.Georgen

Phone: +49 (0) 7724 / 81-0
Fax: +49 (0) 7724 / 81-1309

info2@de.ebmpapst.com
www.ebmpapst.com

As per: 08.10.2019
Version: 1 4
Article number: 9295420100

Original operating manual

INDEX

1 SAFETY REGULATIONS AND INFORMATION	**1**
2 INTENDED USE	**4**
3 TECHNICAL DATA	**4**
4 CONNECTION AND COMMISSIONING	**5**
5 FAULTS, POSSIBLE CAUSES AND REMEDIES	**6**
6 COMPLIANCE	**6**

1 SAFETY REGULATIONS AND INFORMATION

Read the operating manual carefully before commencing work at the product. Pay attention to the following warnings to avoid risk to persons or malfunctioning.
This operating manual is an integral part of the product.
In the event of resale or change of ownership the operating manual must accompany the product. This operating manual may be copied and provided as information on potential risks and their avoidance.

Hazard classification of warning notices

The following risk ratings are used in this operating manual to denote potential risk situations and important safety instructions:



DANGER
This is a potentially dangerous situation and warns of an impending health risk or risk of fatal injury if this warning is not observed. Observe this warning.

WARNING
The dangerous situation can occur and can result in major or fatal injuries if the warning is not observed. Work with extreme care.

CAUTION
The dangerous situation can occur and can result in minor injuries or damage to property if the warning is not observed.

NOTE
A potentially dangerous situation can occur and results in damage to property if not avoided.

Qualification of personnel

Only skilled electricians are permitted to install the product, to carry out the test run and to work at the electrical unit.
Only instructed and authorized skilled personnel are permitted to transport, unpack, operate and service the product.

Basic safety regulations

Safety risks related to the product must be reassessed after installing in the final device.
The operating manual was developed in accordance with European market requirements and may need adapting to the market requirements of the country in question.

When working at the product, observe the following:

Do not make any changes to the product.



WARNING
Impermissible high load

Stop the product immediately after impermissible loading (e.g. impact, heat, overvoltage).

Electrical voltage and current



DANGER
Electrical voltage

Regularly check the electrical equipment of the product.
Eliminate immediately loose connections and defective cables.



CAUTION
In the event of a fault, the product is energized.

Product has basic insulation.
Do not touch the product after installing.

Safety and protective functions



DANGER
Missing safety device and faulty protective equipment.

Without protective equipment severe injuries can occur, e.g. by taking hold of the rotating equipment.
Operate the product with protection guards only.

Electromagnetic radiation

Electromagnetic compatibility (EMC) may affect the system integration of the product due to interaction.

Ensure the electromagnetic compatibility of the entire system.

Moving parts



DANGER
Self-starting product

If voltage is applied, the motor automatically restarts after a mains failure or when blocking has been eliminated.
Do not stand in the danger zone of the product.
Switch off the mains voltage when working on the product and secure against switching on again.



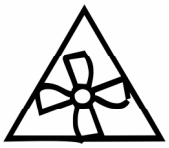

DANGER
Rotating impeller

Contact with the impeller may result in injuries. Long hair, loose-fitting garments and jewellery can be caught and pulled into the product. Risk of injury.
Before starting the product, ensure that it is securely fixed and that the guards are in place.
Do not wear loose-fitting garments or jewellery when working on moving parts.
Protect long hair by wearing a hair net.



DANGER
Faults in safety installations

Safety installations (e.g. smoke detectors) may be affected by the airflow of the product.
If necessary, provide other suitable safety measures.



DANGER
Blocking of escape routes

The product can create dangerously high pressure.
When operating the product ensure that there is adequate supply and exhaust air.



WARNING
Parts transported by the airflow

The product can transport small parts in the airflow and catapult them out.
Ensure that there are no loose small-parts in the intake and exhaust area.
Do not stand in the danger zone of the product.



CAUTION
High risk of fire spreading

Can cause fire to spread.
Never direct the airflow (intake/exhaust side) at a potential source of fire.



CAUTION
Extinguishing flames

The airflow can extinguish flames (e.g. of a gas burner).
Do not direct the airflow (intake/exhaust side) at an open flame.

Hot surface



CAUTION
High temperature at motor housing. Risk of burns

Provide adequate protection against accidental contact.

Emission



DANGER
Acoustic alarms can be overheard.

Alarm signals can be overheard
Take technical protective measures, e.g. optical warnings.



WARNING
A noise pressure level higher than 70dB(A) is possible depending on the installation and operating conditions.

Risk of deafness due to noise.
Take technical protective measures.
Provide operating personnel with protective equipment, e.g. ear protection.

Transport

Only transport the product in its original packaging. Secure during transport.
The vibration values, temperature and climate ranges should not be exceeded during transport.

Storage

Store the device, partially or fully assembled, in a dry place, protected against the weather and free from vibration, in the original packaging in a clean environment.
Protect the device against environmental effects and dirt until final installation.
To guarantee trouble-free operation and the longest possible service life do not store the device for more than one year.
Even devices explicitly intended for outdoor use are to be stored as described prior to commissioning.
Maintain the storage temperature, *see Chapter 3, Technical Data*

Cleaning



NOTE
Product damaged during cleaning

Clean the product carefully with a moist cloth without applying pressure to the rotor. Do not use cleaning agents that contain acids, caustic solutions or solvents.

Disposal

When disposing of the product, observe all requirements and regulations that are relevant in your country.

2 INTENDED USE

The product is designed exclusively as a built-in device for conveying air according to the technical data.
Every use that is not in accordance with the intended purpose, is regarded as misuse of the product.
On-site installations must comply with the mechanical, thermal and service life requirements, *see Chapter 3, Technical Data.*

Intended use includes:

- Operating the product with all protective equipment
- Do not put the product into operation before it has been installed in the customer's application
- Observation of the operating manual

Use for other than the intended purpose

Using the product for the purposes mentioned below is prohibited and can be dangerous:

- Conveyance of air that contains abrasive particles.
- Conveyance of air that has a highly corrosive effect.
- Conveyance of air that has a high dust load, e.g. vacuuming sawdust.
- Conveyance of inflammable gases/particles.
- Contact with materials that can damage the product, e.g. acids, caustic solutions, solvents.
- Exposure to radiation that can damage product components, e.g. strong UV rays or thermal radiation.
- Operating during external vibration.
- Operating the product close to inflammable materials or components.
- Operating the product in an explosive atmosphere
- Use of the prouct as a safety component or for performing safety-relevant functions.
- Operating in medical devices with life-sustaining or life-saving function if not validated together with ebm-papst.
- Operating in non-stationary systems, e.g. railway vehicles, aircraft and spacecraft if not validated together with ebm-papst.
- Operating with fully or partially dismantled or manipulated protective equipment.
- Operating the product under conditions other than those mentioned in the technical data.
- Furthermore, all fields of application not mentioned under intended use.

An in situ assessment must be conducted of the heating behavior (appropriate and inappropriate operation), the protection against contact, electrical shocks, impact of foreign objects or water and the usage at altitudes higher than 2000 meters.

Contact ebm-papst if you have specific queries regarding the product.

3 TECHNICAL DATA

Drawing, see annex

Technical description

Airflow direction	Air outlet over struts
Rotating direction looking at rotor	Counterclockwise
Nominal voltage	48,0 V
Current consumption	7.500 mA
Power consumption	360 W
Speed	6.900 1/min
Max. free-air flow	1.100 m3/h
Mass	0,96 kg
Protection class	I

The product is intended for use in sheltered rooms with controlled temperature and controlled humidity. Directly exposure to water must be avoided.

Pollution degree 1 (according DIN EN 60664-1)
There is either no pollution or it occurs only dry, non-conductive pollution. The pollution has no negative impact.

Ambient conditions

Permitted ambient temperature	
Transport and storage	**Operation**
-40 °C ... 80 °C	-20 °C ... 65 °C

Vibration and shock load

The mechanical Vibration and Shock data for the product is available. If the operation of the product should take place in a sinusoidal vibration containing environment or fixing the product on sinusoidal vibrating surface, please contact our technical support.

Do not operate your product in the resonance range.

4 CONNECTION AND COMMISSIONING

Connect mechanical parts



CAUTION
Risk of cutting/squashing when removing the product from the packaging and during mounting.

Grasp the housing and lift the product carefully out of the packaging. Avoid impact.
Wear safety boots and cut-resistant gloves.



NOTE
Risk of damage to electronic components.

Use ESD protective equipment when mounting.

Connect electrical parts

Connect to the mains after installation.



DANGER
Do not touch. Risk of fatal injury from electrical current.

Ensure that the electrical lines are de-energized.
Secure the operating voltage against switching on again.
Never work on parts that are energized. Only allow skilled electricians to work on the product.



DANGER
Compliance with the electrical installation regulations

Observe the connection regulations that are valid in your country. (e.g. fusing, GFCI)



CAUTION
Electrical voltage
The product is a built-in component and has no switch for disconnecting power.

Only connect the product to current circuits that can be switched off by a switch (all poles disconnected). When working on the product, secure the system/machine in which the product is installed against switching on again.

NOTE
Electromagnetic compatibility (EMC) may affect the system integration of the product due to interaction.

Ensure the electromagnetic compatibility of the entire system.

Voltage control



Speed control via the supply voltage is only permitted within the stipulated supply voltage range. Speed control via PWM of the supply voltage is not permitted.

Requirements:

- Before connecting the product, ensure that the supply voltage corresponds with the product voltage.
- Check whether the data on the nameplate corresponds with the interface data.



Only use cables that are designed for the current on the nameplate and the corresponding ambient conditions. Ensure that the electrical interface data is adequately protected (mechanical).

Find additional information in drawing or label.

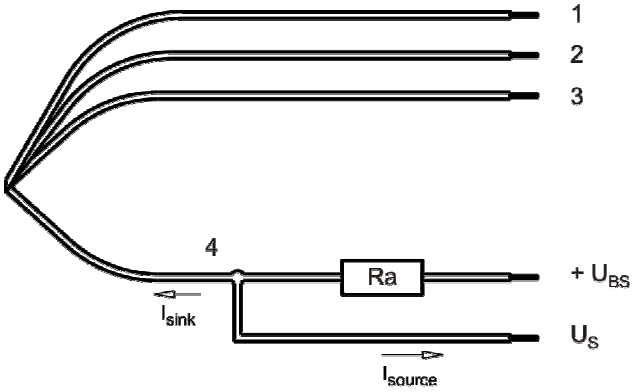

Wire	Color	Operation
1	red	+ UB
2	blue	- GND
3	violet	PWM
4	white	Tacho

The auxilliaries shown on the schematic diagram (which are required for the intended use) are not part of our delivery.

Check connections

NOTE
DC-fans >60V are products of Protection Class I and must be earthed.
Connect product

Check the product for visible damage and the operability of protective equipment before switching on.
If damage is visible, do not start the product.

5 FAULTS, POSSIBLE CAUSES AND REMEDIES

Replace your product by a new one, do not repair it.



DANGER
Electrical voltage at motor

Wait five minutes after the voltage (all poles) has been switched off before opening the product.

Fault/ Error	Possible cause	Possible remedial action
Motor is not rotating	Mechanical blocking	Switch off, de-energize and eliminate mechanical blocking.
	Mains voltage fault	Check mains voltage, re-connect voltage supply.
	Connection faulty	Rectify connection, see pin connection.
	Motor is too hot	Allow motor to cool / identify cause of fault.
	Motor winding interrupted	Exchange product.
	Ambient temperature too high	Reduce ambient temperature if possible.
Impeller out of true	Unbalance of rotating parts	Clean product if still unbalanced after cleaning, exchange product.



Note

If the device is not operated for a lengthy period in installed condition in a dry environment, it is to be started up and operated at full speed for one hour at least every four months. If the device is not operated for a lengthy period in installed condition in a damp environment (e.g. outdoors), it is to be started up and operated at full speed for at least three hours once a month to move the bearings and allow any condensate that may have ingressed to evaporate.

In case of further faults, contact ebm-papst.

Technical safety inspection

What requires checking?	How to check?	Frequency
Protection against accidental contact/ protective clothing	Visual inspection	min. 1/2 yearly
Check product for damage	Visual inspection	min. 1/2 yearly
Fixation of product	Visual inspection	min. 1/2 yearly
Fixation of wires	Visual inspection	min. 1/2 yearly
Fixation of protective earth connection	Visual inspection	min. 1/2 yearly
Insulation of wires	Visual inspection	min. 1/2 yearly
Check impeller for wear/sediments/ corrosion	Visual inspection	min. 1/2 yearly

6 COMPLIANCE

The product bears the CE mark.

The CE mark is affixed to adequately sized nameplates.

Within the meaning of the EMC Guideline 2014/30/EU this document is intended as:

- Mounting instructions/operating manual as per Art. 18, Paragraph (1)
- Installation instructions as per Art. 4
- Operating manual as per Art. 9, Paragraph (3)
- Instructions for use/operating manual as per Art. 18, Paragraph (3)
- Maintenance instructions as per Art.4; Art. 18, Paragraph (1)

Usage restrictions for residential areas as per Art. 18, Paragraph (2)
Accompanying documents as per Art. 17, Paragraph (1)

Within the meaning of Directive 2014/35/EU - electrical equipment designed for use within certain voltage limits – this document is intended as:

- Instructions for use/operating manual as per Art. 6, Paragraph (7); Art. 8 Paragraph (4)

Within the meaning of the Directive 2006/42/EU Machine Guideline, this document is intended as

- Mounting instructions as per Art. 13, Paragraph 1b

The product bears the EAC mark.

The information in this document and in the product data sheet applies to mounting, installation, operation, use and maintenance.

Copying of this document, and giving it others and the use or communication of the contents thereof, are forbidden without express authority. Offenders are liable to the payment of damages. All rights are reserved in the event of the grant of a patent or the registration of a utility model or design.

Schutzvermerk nach DIN 34 beachten !
Refer to protection notice DIN ISO 16016 !

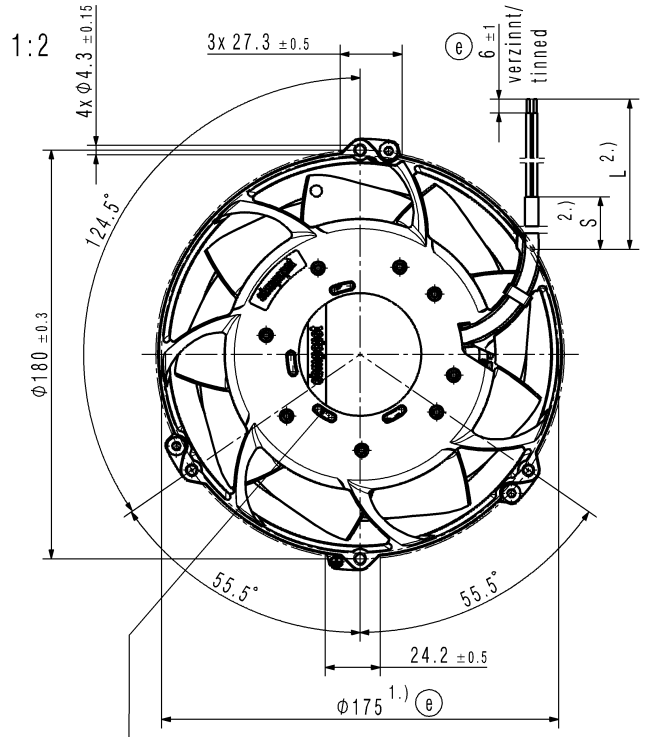

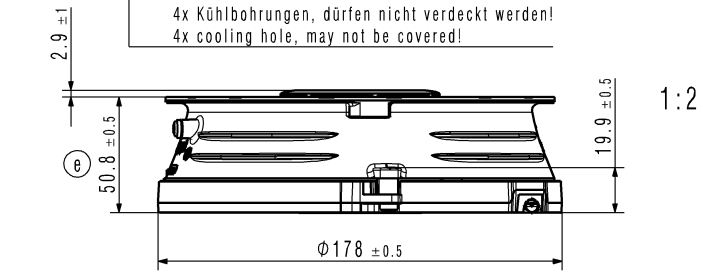

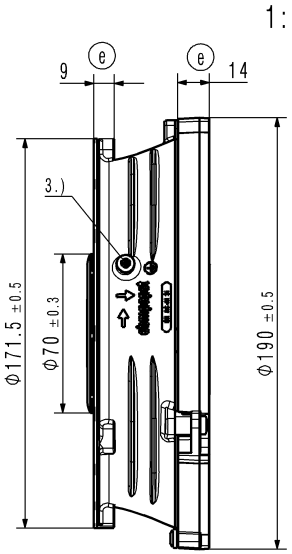

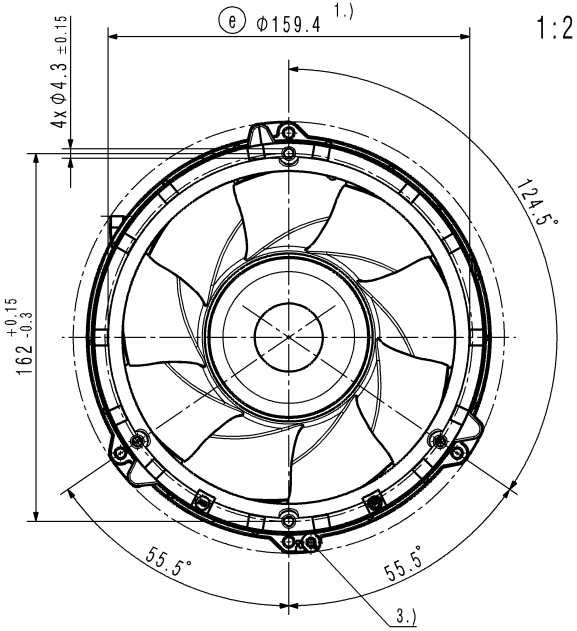

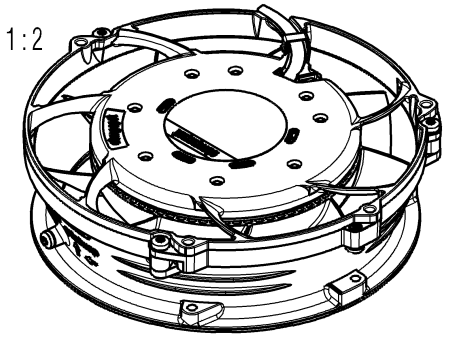

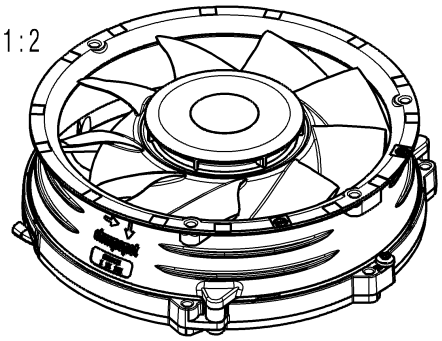

1.) Maße für Montageausschnitt
2.) Anzahl und Länge der Litzen/Schlauch siehe Produktspezifikation
3.) Erdungsschraube nach DIN 7500; CM4x8; Torx, nur wenn in Stückliste enthalten
--- Axialspiel der Kugellager mit Feder spielfrei gelagert

1.) measures for mounting cut out
2.) length and number of wires/tube see product specification
3.) grounding screw according to DIN 7500; CM4x8; Torx, only if included in bill of material
--- ball bearing without clearance by a pre-load spring

SAP-Status/State	Aend.-Nr./ Change-No.	CATIA-System-Version/ CATIA-System-Version	CAD-Umgebung/ CAD-Environment	Werkstoff / Material: -	Volumen / Volume (mm^3):
		92954201 00 CPROD E			Gewicht / Mass (g):
		3D-Referenzmodell / 3D-Referencemodel		Artikel / Title:	
Tolerierung / Tolerances:		Datum	Name		
	Bearb./ Drawn				
Allgemeintoleranzen / Gen. Tolerances:	Gepr./ Checked			Zchg.-Nr./ Drawing No:	Ers.f.Zchg. / Replaces:
	Freig./ Releas.				
ebmpapst	ebm-papst St.Georgen GmbH & Co KG			Dokumenttyp / Type of Document	Teildokument (Blatt/Page) / Index / Index / Format / Size: / Massstab/Scale