W4E300-DS72-02

AC axial fan

sickle-shaped blades (S series), single-intake

Fan housing with guard grille

ebm-papst Mulfingen GmbH & Co. KG
Bachmühle 2 · D-74673 Mulfingen
Phone +49 7938 81-0
Fax +49 7938 81-110
info1@de.ebmpapst.com
www.ebmpapst.com

Limited partnership · Headquarters Mulfingen
Amtsgericht (court of registration) Stuttgart · HRA 590344

General partner Elektrobau Mulfingen GmbH · Headquarters Mulfingen
Amtsgericht (court of registration) Stuttgart · HRB 590142

Nominal data

Type	**W4E300-DS72-02**
Motor	**M4E068-CF**

Phase		1~	1~
Nominal voltage	VAC	230	230
Frequency	Hz	50	60
Method of obtaining data		ml	ml
Valid for approval/standard		CE	CE
Speed (rpm)	min^{-1}	1320	1500
Power consumption	W	72	90
Current draw	A	0.32	0.4
Capacitor	µF	2	2
Capacitor voltage	VDB	400	400
Capacitor standard		S0 (CE)	S0 (CE)
Max. back pressure	Pa	60	60
Max. back pressure	in. wg	0.24	0.24
Min. ambient temperature	°C	-25	-25
Max. ambient temperature	°C	50	50
Starting current	A	0.6	0.57

ml = Max. load · me = Max. efficiency · fa = Free air · cs = Customer specification · ce = Customer equipment
Subject to change

AC axial fan

sickle-shaped blades (S series), single-intake

Fan housing with guard grille

Technical description

Weight	4.9 kg
Fan size	300 mm
Rotor surface	Painted black
Blade material	PP plastic
Fan housing material	Sheet steel, pre-galvanized and coated with black plastic
Guard grille material	Steel, phosphated and coated with black plastic
Number of blades	5
Airflow direction	"A"
Direction of rotation	Clockwise, viewed toward rotor
Degree of protection	IP44; installation- and position-dependent as per EN 60034-5
Insulation class	"B"
Moisture (F) / Environmental (H) protection class	H0+
Max. permitted ambient temp. for motor (transport/storage)	+ 80 °C
Min. permitted ambient temp. for motor (transport/storage)	- 40 °C
Installation position	Shaft horizontal or rotor on bottom; rotor on top on request
Condensation drainage holes	On rotor side
Mode	S1
Motor bearing	Ball bearing
Touch current according to IEC 60990 (measuring circuit Fig. 4, TN system)	< 0.75 mA
Motor protection	Thermal overload protector (TOP) internally connected
With cable	Variable
Protection class	I (with customer connection of protective earth)
Conformity with standards	EN 60335-1; CE

ebm-papst Mulfingen GmbH & Co. KG · Bachmühle 2 · D-74673 Mulfingen · Phone +49 (0) 7938 81-0 · Fax +49 (0) 7938 81-110 · info1@de.ebmpapst.com · www.ebmpapst.com

AC axial fan

sickle-shaped blades (S series), single-intake

Fan housing with guard grille

Product drawing

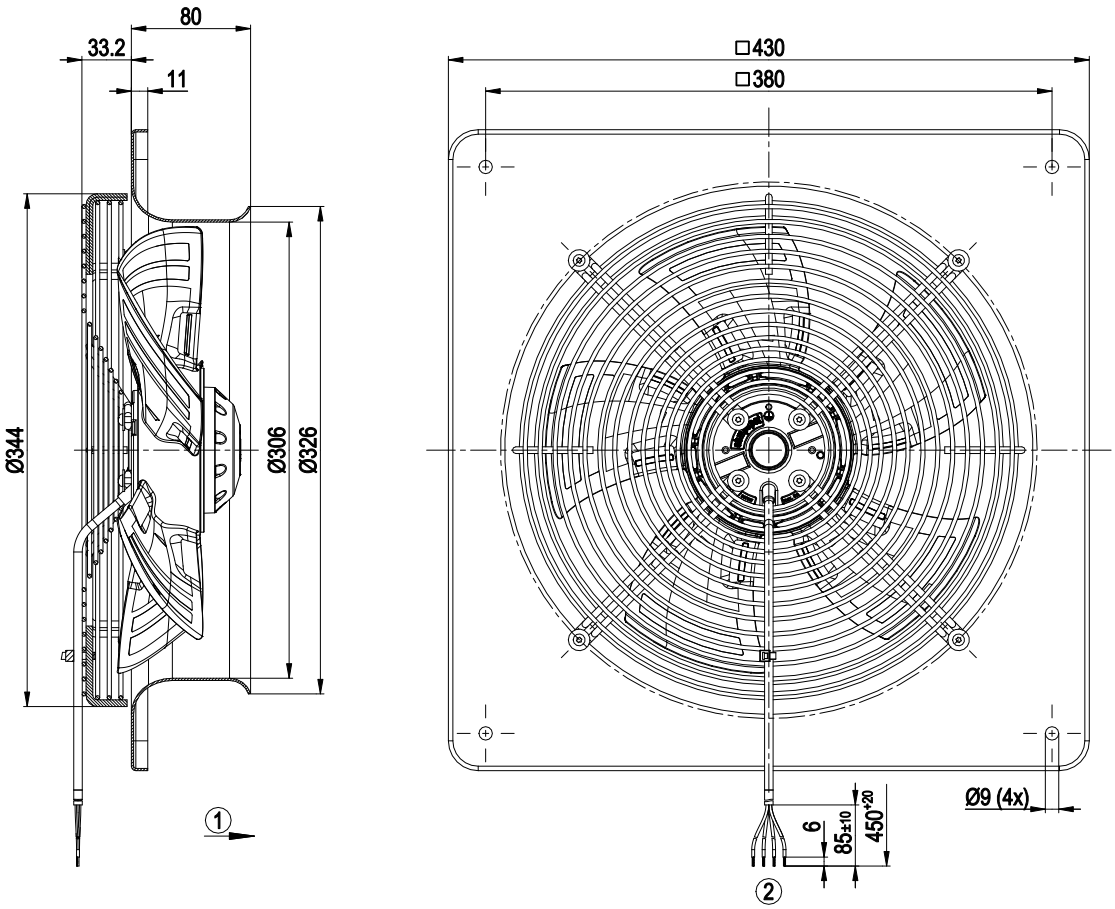

1	Direction of air flow "A"
2	Cable PVC 4G 0.5 mm², 4x crimped splices

Connection diagram

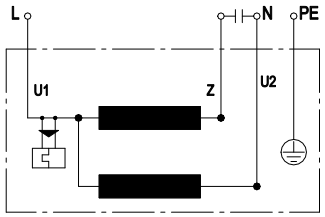

U1	blue	Z	brown	U2	black
PE	green/yellow				

ebm-papst Mulfingen GmbH & Co. KG · Bachmühle 2 · D-74673 Mulfingen · Phone +49 (0) 7938 81-0 · Fax +49 (0) 7938 81-110 · info1@de.ebmpapst.com · www.ebmpapst.com

AC axial fan

sickle-shaped blades (S series), single-intake

Fan housing with guard grille

Curves: Air performance 50 Hz

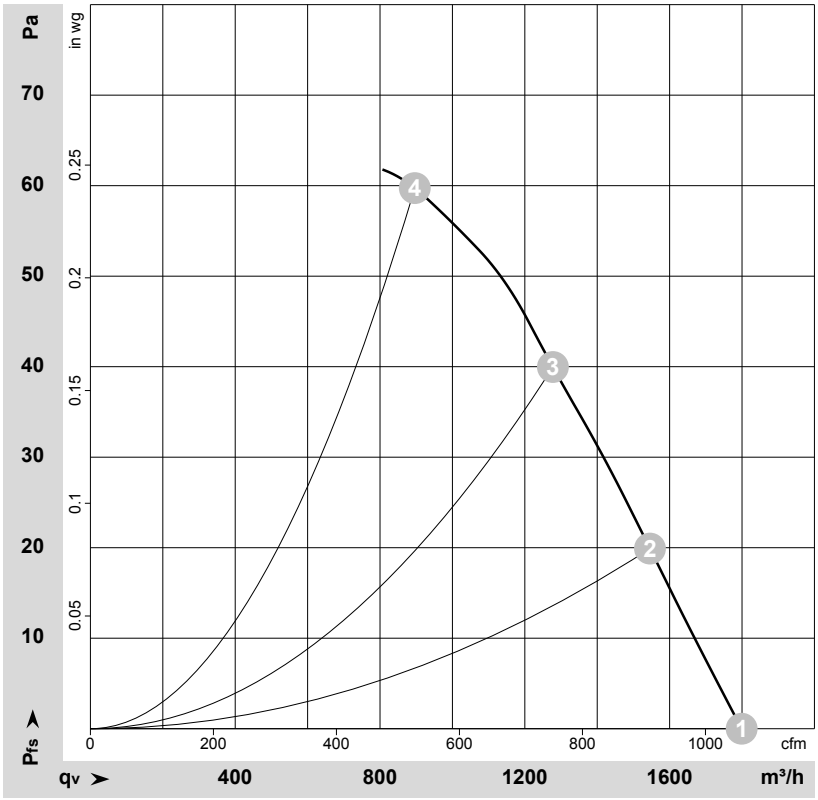

ρ = 1.15 kg/m³ ± 2 %

Measurement: LU-112383-1

Air performance measured according to ISO 5801 installation category A. For detailed information on the measurement setup, contact ebm-papst. Intake sound level: Sound power level according to ISO 13347 / sound pressure level measured at 1 m distance from fan axis. The values given are valid under the specified measuring conditions and may vary due to conditions of installation. For deviations from the standard configuration, the parameters have to be checked on the installed unit.

Measured values

	U	f	n	P_e	I	LpA_{in}	LwA_{in}	q_V	p_{fs}	q_V	p_{fs}
	V	Hz	min^{-1}	W	A	dB(A)	dB(A)	m^3/h	Pa	cfm	in. wg
1	230	50	1385	60	0.28	53	60	1800	0	1060	0.00
2	230	50	1365	63	0.28	52	59	1545	20	910	0.08
3	230	50	1355	66	0.29	51	58	1280	40	750	0.16
4	230	50	1320	72	0.32	53	61	895	60	525	0.24

U = Power supply · f = Frequency · n = Speed (rpm) · P_e = Power consumption · I = Current draw · LpA_{in} = Sound pressure level intake side · LwA_{in} = Sound power level intake side
q_V = Air flow · p_{fs} = Pressure increase

ebm-papst Mulfingen GmbH & Co. KG · Bachmühle 2 · D-74673 Mulfingen · Phone +49 (0) 7938 81-0 · Fax +49 (0) 7938 81-110 · info1@de.ebmpapst.com · www.ebmpapst.com

AC axial fan

sickle-shaped blades (S series), single-intake

Fan housing with guard grille

Curves: Air performance 60 Hz

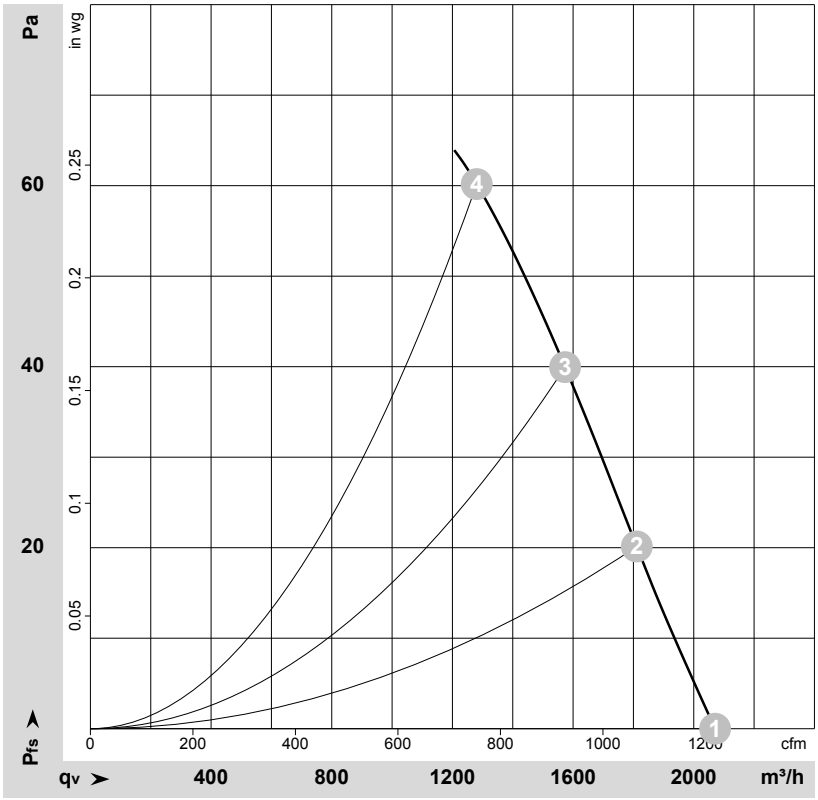

ρ = 1.15 kg/m³ ± 2 %

Measurement: LU-112387-1

Air performance measured according to ISO 5801 installation category A. For detailed information on the measurement setup, contact ebm-papst. Intake sound level: Sound power level according to ISO 13347 / sound pressure level measured at 1 m distance from fan axis. The values given are valid under the specified measuring conditions and may vary due to conditions of installation. For deviations from the standard configuration, the parameters have to be checked on the installed unit.

Measured values

	U	f	n	P_e	I	LpA_{in}	LwA_{in}	q_V	p_{fs}	q_V	p_{fs}
	V	Hz	min^{-1}	W	A	dB(A)	dB(A)	m^3/h	Pa	cfm	in. wg
1	230	60	1595	78	0.34	56	63	2070	0	1220	0.00
2	230	60	1560	83	0.36	55	62	1810	20	1065	0.08
3	230	60	1535	86	0.37	55	62	1575	40	925	0.16
4	230	60	1500	90	0.40	55	62	1280	60	755	0.24

U = Power supply · f = Frequency · n = Speed (rpm) · P_e = Power consumption · I = Current draw · LpA_{in} = Sound pressure level intake side · LwA_{in} = Sound power level intake side
q_V = Air flow · p_{fs} = Pressure increase

ebm-papst Mulfingen GmbH & Co. KG · Bachmühle 2 · D-74673 Mulfingen · Phone +49 (0) 7938 81-0 · Fax +49 (0) 7938 81-110 · info1@de.ebmpapst.com · www.ebmpapst.com