Part Number: BU-2741-D-48-*
Description: Multiple Feature Test Prod to Unshrouded Right Angle Banana Plug
2607

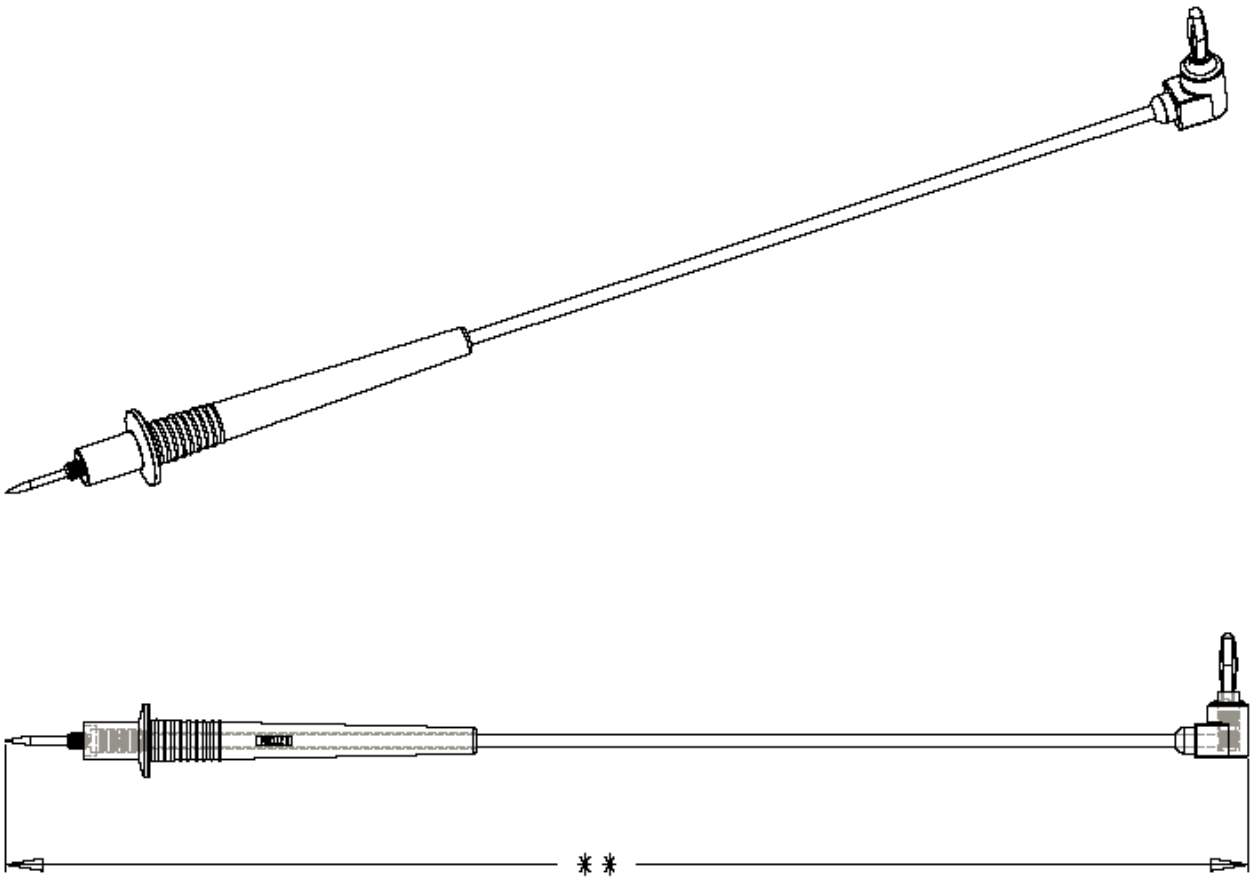

- **Multiple Feature Test Prod to Unshrouded Right Angle Banana**
- **Material: Needle: Stainless steel; Banana Plug: Nickel-plated brass; Housing: ABS; Hook-up wire: #18(65/36) AWG tinned copper with 90° C PVC insulation;**
- **** Length: 53.5 ”(1.36m); Wire length: 48”(1.22 m)**
- *** Std Colors: -0 Black –2 Red**
- **Rating: 600V, 10 Amps**
- **RoHS Compliant**

Mueller Electric Company
1625 E. 31st Street
Cleveland, Ohio 44114
ISO 9001:2000
Over 95 Years Of Innovation
www.muellerelectric.com
TEL. 800-955-2629
TEL. 216-771-5225
FAX. 216-771-3068