Accessories
Compression Fitting
For Temperature Sensors
CF-M-6-G1/2-A4

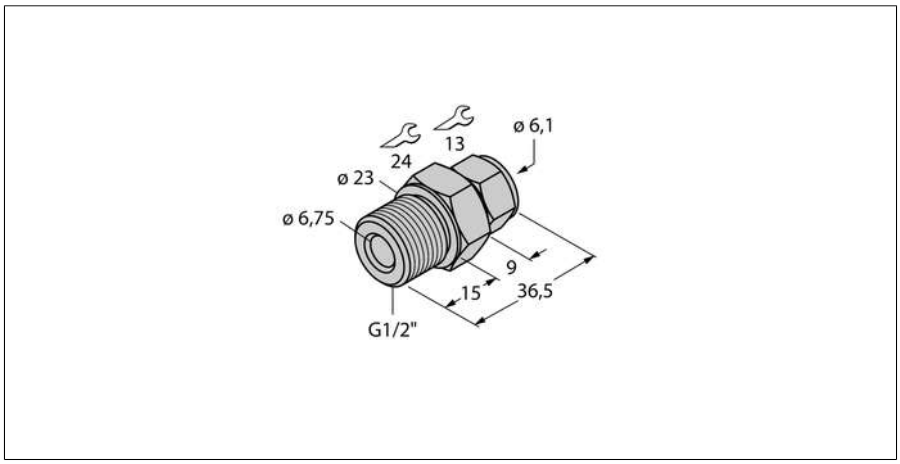

- **Compression fittings for direct mounting of TP temperature probes**
- **Metal compression fitting**
- **For probe with 6 mm diameter**
- **Process connection G1/2" male thread**

General description

With compression fittings, probes can be mounted directly where they are needed and they can be immersed as deep as wanted. Through direct contact with the medium, they react immediately to temperature changes.

Type designation	CF-M-6-G1/2-A4
Ident no.	9910530
Type	CF-M-6-G1/2-A4
Ident. no.	9910530
Temperature range	
Measuring range	-50…350 °C
Temperature operating range	-58…662 °F
Housing	
Housing material	Stainless steel, 1.4404 (AISI 316L)
Sealing material	stainless steel
Internal diameter	7 mm
Process connection	G 1/2" male thread
Pressure resistance	100 bar
Max. tightening torque of housing nut	100 Nm

Edition • 2020-11-24T09:36:59+01:00

Hans Turck GmbH & Co.KG ● D-45472 Mülheim an der Ruhr ● Witzlebenstraße 7 ● Tel. 0208 4952-0 ● Fax 0208 4952-264 ● more@turck.com ● www.turck.com