

LAS N WS blau/blue

Industrial Connectors:Measuring and Testing Equipment:Plugs:4 mm system

Product description	
Description	Connector for tower construction with screw connection for leads from 0.5 mm² to 1.5 mm², outer diameter of lead max. 4.2 mm. Plug 4 mm with caged spring, not contact-protected. Simple assembly by "Click-System".
Type	LAS N WS blau/blue
Order No.	934 100-102
System	4 mm system
Housing Color	blue
Other standard types	black color, order no. 934 100-100; red color, order no. 934 100-101; yellow color, order no. 934 100-103; green color, order no. 934 100-104

Drawing

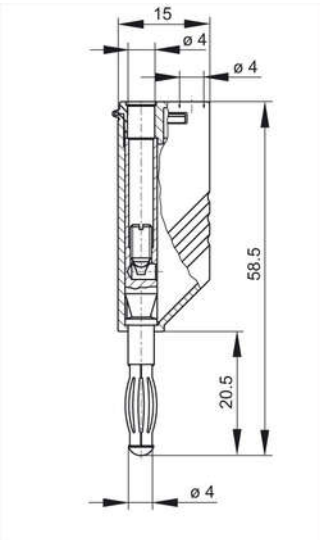

Technical data	
Pin dimensions	4 mm with laminated spring
Type of contact	pin (spring-loaded)
Type of termination	screw
Rated voltage	DC 60 V
Rated current	24 A
Contact resistance	3 mOhm
Material	
Contact material	copper beryllium
Contact surface material	nickel-plated
Housing material	PA
Environmental conditions	

Temperature range	-15 °C to +70 °C
Inflammability class	
Housing	94 HB