DATA SHEET

Power supply CP-S.1 24/40.0

Mid-high performance switch mode power supply

CP-S.1 power supplies: high efficiency and reliability delivered in a compact footprint.

Designed for a huge variety of applications, including machine building segments, this advanced range boosts an integrated 150 % power reserve for five seconds and operates at an efficiency of up to 94 %. With overheat protection, active power factor correction, a broad certified AC and DC input range and extensive worldwide approvals including ma-rine, the all-new CP-S.1 power supplies are a preferred choice for multiple industrial applications.



2CDC271005V0021

Characteristics

- Rated supply voltage range from 110-240 V AC / 110-250 V DC
- Rated output voltage 24 V DC
- Rated output current of 40.0 A
- Rated output power 960 W
- High efficiency of 94 %
- Power reserve design of 150 % for 5 s
- Output voltage adjustable via front-face rotary potentiometer “OUTPUT Adjust”, 24-28 V
- Low power dissipation and low heating
- Free convection cooling (no forced cooling)
- Coated PCBAs
- Open-circuit, overload and short-circuit protection
- Integrated input fuse
- DC OK - signaling output “13-14” (relay)
- CP-C.1-A-RU redundancy unit offers true redundancy, available as accessory
- Various approvals and marks

Ordering details

Description	Rated input voltage	Rated output voltage	Rated output current	Output power	Order code
CP-S.1 24/40.0	110 - 240 V AC, 110 - 250 V DC	24 V DC	40.0 A	960 W	1SVR320861R1000
CP-C.1-A-RU	10 - 56 V DC	12 - 48 V DC	2 x 20 A or 1 x 40 A	-	1SVR360060R1001

Function

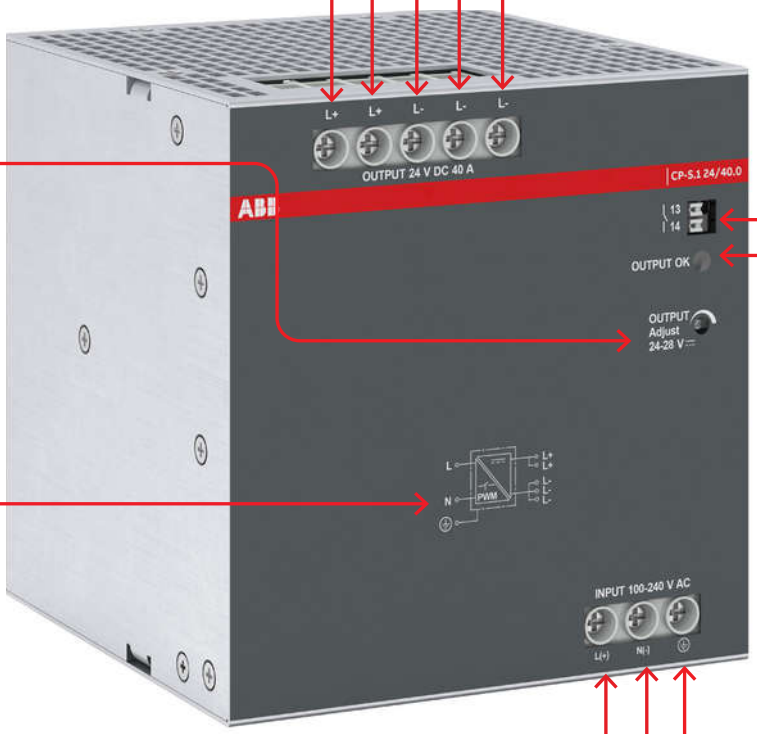

OUTPUT L+, L-:
Output terminals
24 V DC

OUTPUT Adjust:
Rotary potentiometer - Adjustment of output voltage
24-28 V DC

Circuit diagram

Additional L(-) terminal for e.g. grounding

13-14: Relay output
Relay output to signal 'Output OK'

OUTPUT OK: green LED for indication of 24 V DC

- on: output voltage >92 % of adjusted voltage
- flashes: output voltage <90 % of adjusted voltage

INPUT L(+), N(-), PE:
Input terminals
110 - 240 V AC /
110 - 250 V DC

Application

The new family of CP-S.1 power supplies is the right fit for OEM machine building applications. Space-saving design, a complete 24 V DC offering of up to 960 W and a metal enclosure perfectly matches the high requirements of this segment.

The CP-S.1 has a wide certified AC or DC input voltage range. Furthermore, the CP-S.1 is equipped with capacitors that ensure a hold-up time of at least 20 ms. This enables world-wide usage and permits safe operation in fluctuating networks and battery-powered applications.

The CP-S.1 power supplies with the robust metallic housing and the reliable construction are suitable for applications in industrial environments.

The power reserve of up to 150 % for five seconds enables trouble-free starting of heavy loads eliminating the need of usage of an oversized power supply.

Power reserve

The primary switch mode power supply CP-S.1 is equipped with a power reserve functionality to handle the start-up of particularly heavy loads (e.g. of a capacitive load or a motor). To ensure that heavy loads are started up, the CP-S.1 delivers additionally up to 150 % of the rated output current for up to 5 s to secure the operation of the application.

Signaling output

For the communication of the status of the power supply the CP-S.1 is equipped with a relay output to signal 'OUTPUT OK'. This signal can be used for communication to a higher level control system e.g. a PLC.

Adjustable output voltage

The CP-S.1 range power supplies feature a continuously adjustable output voltage of 24 to 28 V DC. Thus, they can be optimally adapted to the application, e.g. compensating the voltage drop caused by a long line length.

Adjustable output voltage

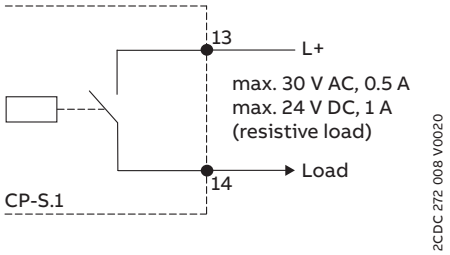

Output OK, relay output

Rated voltage limits of the signaling output relay:
Acc. UL 61010-1: 30 V RMS, 42.4 V peak, 60 V DC

—

LEDs and signaling output

Output voltage	Output OK: LED green	Rated output voltage
≥ 92 % of U_{out}		Closed
< 90 % of U_{out}		Open 

It is possible to use the messaging and signaling functionality with power supplies connected in parallel. The parallel operation has no influence on the function.

Operating mode

Parallel operation

There are two main reasons for a parallel connection of power supplies:

- Increase of power
- Redundancy

Up to 3 devices of the same type can be connected in parallel. For safe and reliable operation it is important to follow the recommendations given in the following section.

Parallel connection of power supplies for increased power

If the current required by the load is higher than a single power supply can deliver, for example after the expansion of an existing installation, an increase of the output power can be obtained by connecting power supplies in parallel. The following prerequisites have to be fulfilled when connecting power supplies in parallel for the purpose of increased power:

- The paralleled devices must be of the identical type.
- Repeated voltage drops on the supply lines or at the terminals would lead to unbalanced load at the common connection point. To prevent this, you have to observe the following when connecting the power supply units:
  - Identical lengths of the load supply lines.
  - Identical conductor cross sections of the load supply lines.
  - Terminal screws have to be fastened with the same torque to guarantee equal contact resistances.
  - The output voltages of the power supplies must not differ by more than 50 mV. Otherwise, safe operation is not possible.

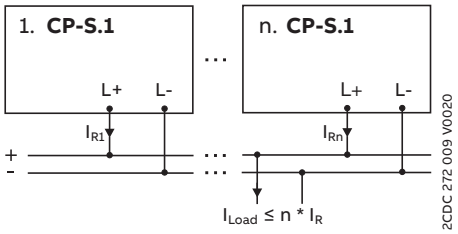

Parallel operation, increased power ($n \leq 3$)

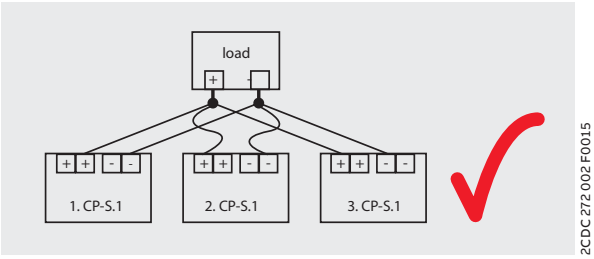

Correct wiring for increased power

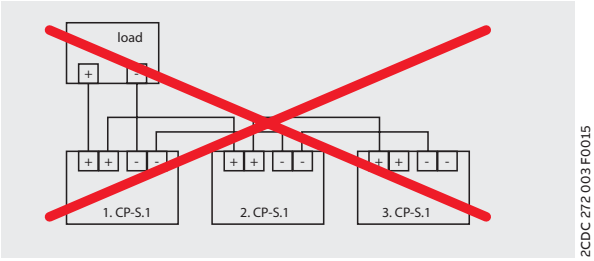

Incorrect wiring for increased power

Important
The devices must not be connected directly to each other! This could lead to an overload of the terminals since the terminals are dimensioned for the maximum output current of a single power supply only. Always use a common connection point!

Parallel connection of power supplies for redundancy

Several power supplies are connected in parallel in order to guarantee continuous operation of the system if one power supply fails. CP-S.1 can be used in two different redundancy modes depending on what type of redundancy is required:

- Simple redundancy
- True redundancy

Simple redundancy
For simple or redundancy, the power supplies are connected in parallel like for the increase of capacity. To achieve redundancy the current required by the load must not exceed the maximum output power of one single power supply (in case of “1+1 redundancy”) or n power supplies (where n is max. 3).

We recommend connecting the primary sides of the power supplies to different phases of the mains in order to obtain continuous operation of the system if one phase fails.

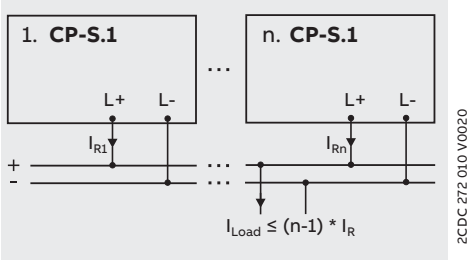

Parallel operation, redundancy (n ≤ 3)

True redundancy
True redundancy gives higher system availability compared to simple redundancy. In a true redundancy setup the power supplies are decoupled from each other with decoupling diodes. This protects the individual power supplies from affecting each other in case of failure of one unit or short cirucit on the secondary side or in the wiring.

For two inputs of up to 30 A and one output up to 60 A the ABB redundancy unit CP-C.1-A-RU (available as an accessory) can be used.

The inputs of these units are connected to the terminals L+ and L- of the power supplies. The loads are supplied directly from the outputs of the redundancy unit.

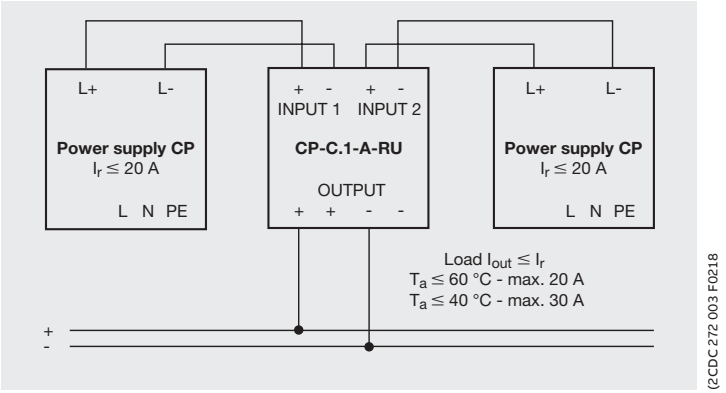

True redundancy using a CP-C.1-A-RU redundancy unit

Mounting

To mount the unit place the upper edge of the DIN rail adapter on the upper edge of the DIN rail holding the unit slightly tilted upwards as shown in the illustration. Then tilt the unit down until the latch snaps onto the DIN rail.

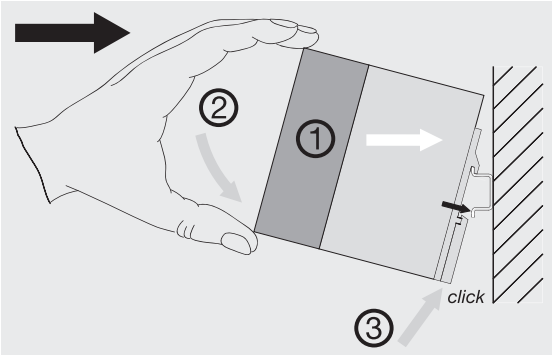

2CDC 273 002 F0015

Mounting positions

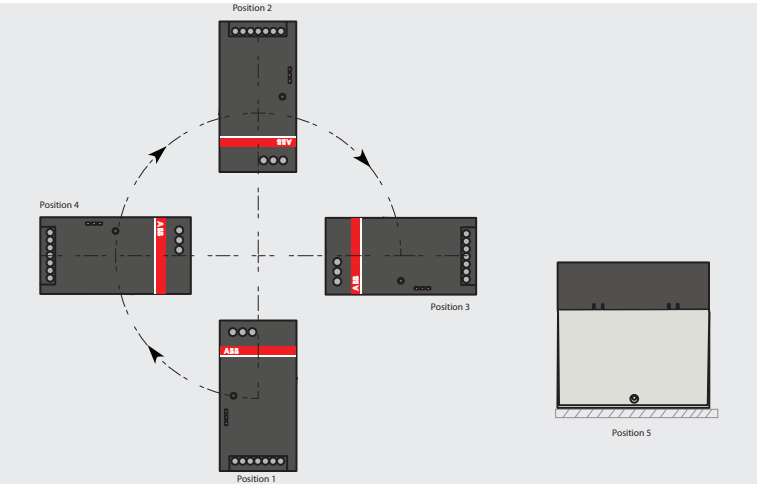

2CDC 272 001 F0016

In order to ensure a sufficient convection in mounting position 1, the minimum distance to other modules must not be less than 50 mm in vertical direction and 30 mm in horizontal direction. For the derating of the output current, see the characteristic curve of temperature. Details for other mounting positions on request.

Demounting

To release the unit pull the latching lever downwards with a screwdriver and press the upper side of the the latching lever down. The device can be unhinged from the DIN rail and removed.

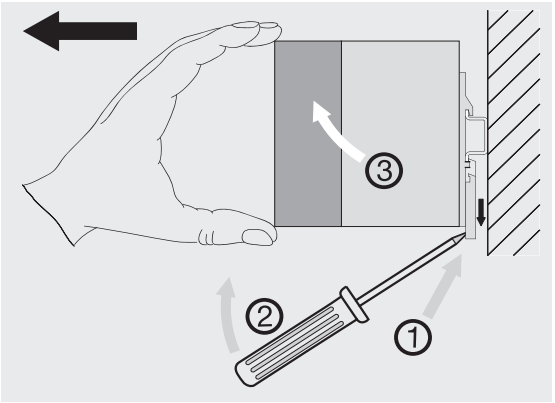

2CDC 273 003 F0015

Electrical connection

Connect the input terminals “L“ to line and “N” to neutral conductor or to "+" and "-" with DC supply “+” to “L” and “-” to “N”. The protective earth conductor PE must be connected before putting the device into operation. The installation must be executed acc. to EN 61010-1. Provide a suitable disconnecting device (e. g. line protection switch, MCB or fuse) in the supply line. The input side of the power supply is protected by an internal input fuse.

The wiring, cable choice and their protection shall comply to the local electrical standard. We recommend choosing the conductor cross-section as large as possible in order to minimize voltage drops. Check the polarity. The device is overload, short-circuit and open-circuit proof. The secondary side of the power supply is electrically isolated from the input and internally not earthed (SELV) and can be earthed for PELV.

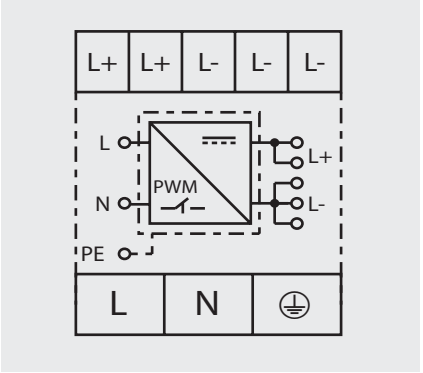

L+, L- Output voltage
L, N Input voltage
⏚ Protective earth (PE)

Connection diagram

24 and 48 V DC connection

The connection diagram below shows how to setup two power supplies for +/-24 or 48 V DC output voltage.

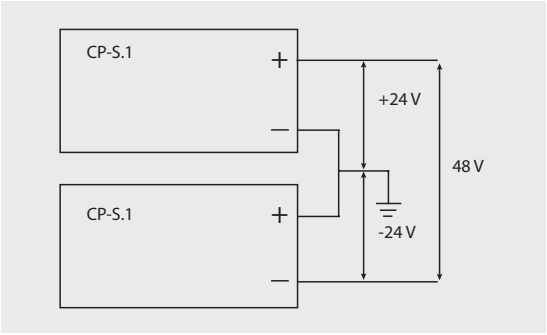

Connection diagram for +/-24 or 48 V DC output voltage

High-voltage test (HIPOT)

The power supplies have been high-voltage tested in the factory.

However, if high-voltage test of the power supply is required during the final inspection and testing of the end- application, the built-in gas discharge tube of the CP-S.1 24/40.0 needs to be disconnected.

Applicable for high-voltage tests > 0.5 kV AC / 0.707 kV DC the gas discharge tube can be disconnected by considering the following steps:

- Disconnect the unit from the supply voltage
- Remove the screw completely, marked with (2) and keep it in a safe place. Once unscrewed, the gas-discharge tube is disconnected and no longer functional.
- Perform high-voltage test of the power supply: avoiding unnecessary loading or damages due to excessive test voltages
- After successfully performing high-voltage test, use original gas-discharge tube screw and screw back into the power supply

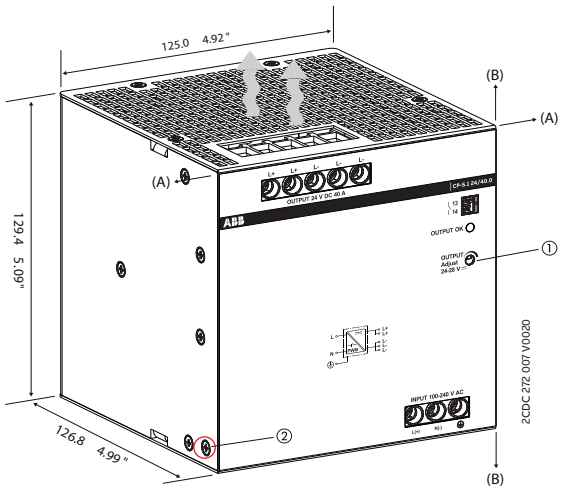

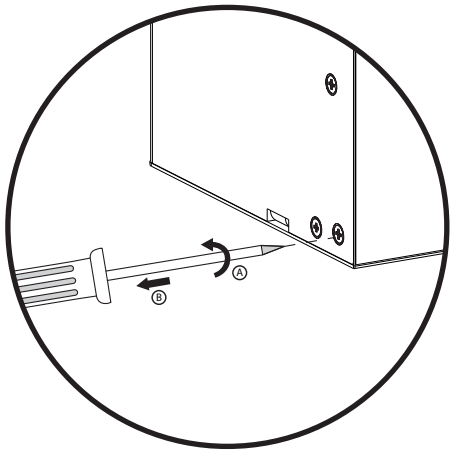

Potential-related wiring for the high-voltage test

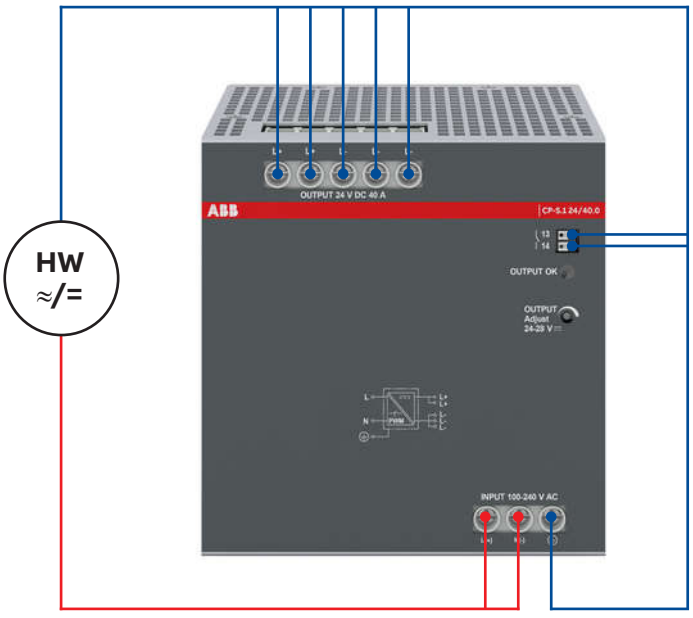

Electrical strength of the insulation

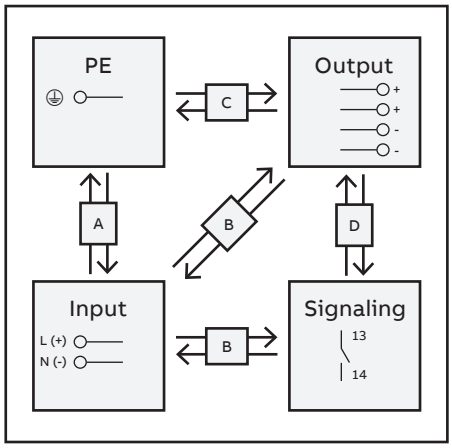

	A	B	C	D
Type test (IEC/EN 61010-1)	1.5 kV AC / 2.121 kV DC	3 kV AC / 4.242 kV DC	0.5 kV AC / 0.707 kV DC	0.5 kV AC / 0.707 kV DC
Production test	3 kV AC / 4.242 kV DC	3 kV AC / 4.242 kV DC	0.5 kV AC / 0.707 kV DC	0.5 kV AC / 0.707 kV DC
Field test (with gas-filled surge arrester)	0.5 kV AC / 0.707 kV DC	0.5 kV AC / 0.707 kV DC	0.5 kV AC / 0.707 kV DC	0.5 kV AC / 0.707 kV DC
Field test (gas-filled surge arrester de-contacted)	1.5 kV AC / 2.121 kV DC	3 kV AC / 4.242 kV DC	0.5 kV AC / 0.707 kV DC	0.5 kV AC / 0.707 kV DC

Safety instructions and warnings



In operation pay attention to:

- Do not modify the installation (primary and secondary side)! High current! Risk of electric arcs and electric shock (danger to life)!
- Risk of burns: Depending on the operation conditions the housing can become hot.
- The device contains no user serviceable parts. In any case of device malfunction please send the unit back to manufacturer.



The device must be installed by qualified persons only and in accordance with the specific national regulations (e. g. VDE, etc.).



The CP-S.1 power supplies are chassis-mounted units. It is maintenance-free and does not contain any integral setting elements and should therefore not be opened.



Before any installation, maintenance or modification work:

- Read the operating and installation instructions carefully and completely!
- Disconnect the system from the supply network and protect against switching on!



CAUTION

Improper installation/operation may impair safety of personnel and cause operational difficulties or destruction of the unit.



WARNING

Before start of operation the following must be ensured:

- Connection to mains or DC supply according to the specific national regulations for class of protection I. Power supply cables and unit must be sufficiently fused. A disconnecting device has to be provided for the end product to disengage unit and supply cables from supply mains if required.
- Rate the output lines for the output current of the power supply and connect them with the correct polarity.
- In order to ensure sufficient convection the distance to the other devices has to be considered.



WARNING

Danger to life!

Never carry out work when voltage is present. The power supply contains components with high stored energy and circuits with high voltage! Do not introduce any objects into the unit and do not open the unit. With some units of this range the output is capable of providing hazardous energy. Ensure that the service personnel is protected against inadvertent contact with parts carrying energy. If the internal fuse is blown most probably the device is defect. In this case an examination of the device by the manufacturer is necessary.

Technical data

Data at T_a = 25 °C, U_{in} = 230 V AC and rated values, unless otherwise indicated

Type			**CP-S.1 24/40.0**
Input circuit - Supply circuit (L(+), N(-))			
Rated input voltage U_{in}			110 - 240 V AC, 110 - 250 V DC
Input voltage range			103 - 264 V AC / 103 - 277 V DC
Input current range at rated output power		100 - 240 V AC	5.0 - 11.5 A
		100 - 250 V DC	4.48 - 13.5 A
Typical input current		at 115 V AC	9.5 A
		at 230 V AC	5.0 A
Max. power consumption		at 230 V AC	1,022 W
Rated frequency			DC, 50 / 60 Hz
Frequency range		AC	45 - 65 Hz
Inrush current limiting, cold state			≤ 19 A
Let-through energy I^2t, cold state		at 230 V AC	< 5 A^2s
Discharge current towards PE			< 3.5 mA
Hold-up time		at 115 V AC	> 20 ms
		at 230 V AC	> 20 ms
Internal input fuse			Yes
Recommended backup fuse for wire protection at 1.5 mm^2			1 pole miniature circuit breaker ABB type S 200 (for USA/CAN: use appropriate branch circuit 20 A fuse acc. to regional and national regulations)
		characteristic	B or C
		max. rating	16 A
Power Factor Correction (PFC)			yes, active
Transient over-voltage protection			yes, varistor
User interface - Indication of operational states			
Output voltage	LED ‚OUTPUT OK'	Green	> 92 % adjusted U_{out}
	LED ‚OUTPUT OK'	Flash	< 90 % adjusted U_{out}
Output circuits - power output (L+, L-)			
Rated output voltage			24 V DC
Tolerance of the output voltage			± 1 %
Adjustment range of the output voltage			24…28 V DC
Rated output power			960 W
Rated output current I_R		-25°C ≤ T_a ≤ 55 °C	40 A
Dynamic Boost output current		-25°C ≤ T_a ≤ 55 °C	60 A (5 s)
Short-circuit current limiting			< 70 A
Derating of the output current		55 °C ≤ T_a ≤ 70 °C	2 % / K
Deviation width of output voltage	Load effect/ load regulation	static load change: 25 - 100 %	< 1 %
	Transient response of voltage to load current changes	dynamic load change:	10 % - 100 %: < 3 %
		recovery time T_R	< 1 ms
	Change of input voltage	within the rated input voltage	< 0.5%
Starting time after applying the supply voltage			< 1,500 ms
Residual ripple and switching peaks		BW = 20 MHz	< 75 mV_{pp}, class A
Parallel connection			yes, up to 3
Series connection			yes, 2

Type		**CP-S.1 24/40.0**
No-load, overload and short-circuit behavior		
Characteristic curve of output		U/I characteristic curve combined with foldback behavior
Short-circuit protection		continuous short-circuit stability
Short-circuit behavior		current limiting
Resistance to reverse feed		≤ 35 V DC
Overvoltage protection		yes, < 35 V
Overload protection		constant current limitation
Overtemperature protection		protection by switch off in case of overtemperature (thermal)
No-load protection		continuous no-load stability
Starting of capacitive loads		Yes
Signaling outputs - OUTPUT OK signaling output		
Type of output	13 - 14	relay, n/o contact
ON (contact closed)		92 % adjusted U_{out}
OFF (contact open)		90 % adjusted U_{out}
Contact ratings	max. switching voltage / current	30 V AC - 0.5 A / 24 V DC - 1 A (resistive load)
	min. switching voltage/ current	5 V DC / 1 mA
General data		
Efficiency	at rated load	> 94 %
Power losses	at rated load	< 62 W
	at 50 % of rated load	< 45 W
	at no load	< 6.5 W
Duty time		100 %
MTBF	acc. to MIL 217 HDBK GB 25	on request
Dimensions (W x H x D)		see dimensional drawings
Material of housing	cover	zinc-coated sheet-steel
	housing shell	aluminium
	front	plastic, PC GE8B35, V0
Mounting		DIN rail (IEC/EN 60715), snap-on mounting
Mounting position		position 1 (standard orientation); other mounting positions possible with derating / deratings are available on demand
Minimum distance to other units	horizontal	30 mm
	vertical	50 mm
Degree of protection (IEC/EN 60529)	housing / terminals	IP20 / IP20
Protection class (IEC/EN 61140)		I
Electrical connection - Input circuits (L(+), N(-), PE)		
Connecting capacity	rigid	0.5-10.0 mm² (20-8 AWG)
	fine-strand with(out) wire end ferrule	0.5-10.0 mm² (20-8 AWG)
Stripping length		10 mm
Tightening torque		1.47 Nm 13.0 lb.in
Recommended screw driver		PH2 / Ø 5.5 x 1.0 mm
Output circuits (L+, L+, L-, L-)		
Stripping length		10 mm
Tightening torque		1.47 Nm 13.0 lb.in
Recommended screw driver		PH2 / Ø 5.5 x 1.0 mm
Signalling output (13-14)		
Connecting capacity	rigid	0.15 - 0.8 mm² (26 - 18 AWG)
	fine-strand with(out) wire end ferrule	0.15 - 0.8 mm² (26 - 18 AWG)
Stripping length		7 mm
Connection terminals		push-in

Type		**CP-S.1 24/40.0**
Environmental data		
Ambient temperature range	operation	-25…+70 °C (-13… +158 °F)
	rated output power	-25…+55 °C (-13… +140 °F)
	storage	-40…+85 °C (-40… +185 °F)
	transportation	-40…+85 °C (-40… +185 °F)
Climatic class (IEC/EN 60721-3-1)	storage	1K2
Climatic class (IEC/EN 60721-3-2)	transportation	2K2
Climatic class (IEC/EN 60721-3-3)	operation	3K3
Damp heat, cyclic (IEC/EN 60068-2-30)		test Db: 55 °C, 2 cycles
Vibration (IEC/EN 60068-2-6)		test Fc: 10-58 Hz, amplitude ±0.15 mm, 58-150 Hz, 2 g, 10 sweep cycles each axis
Shock, half-sine (IEC/EN 60068-2-27)		test Ea: 30 g, 6 ms, 3 pulses each axis; bump 20 g, 11 ms, 100 pulses each axis
Location classes (according DNVGL)		temperature: B / humidity: B / vibration: A / enclosure: A
Coated PCBA		yes
Isolation data		
Rated impulse withstand voltage U_{imp} (IEC/EN 62477-1)	input circuit / output circuit	4 kV (1.2/50 µs)
	input circuit / PE	4 kV (1.2/50 µs)
	input circuit / relay contact	4 kV (1.2/50 µs)
	output circuit / relay contact	0.8 kV (1.2/50 µs)
	relay contact / PE	0.8 kV (1.2/50 µs)
	output circuit / PE	0.8 kV (1.2/50 µs)
Rated insulation voltage U_i (IEC/EN 62477-1)	input circuit / output circuit	300 V
	input circuit / PE	300 V
	input circuit / relay contact	300 V
	output circuit / relay contact	50 V
	relay contact / PE	50 V
	output circuit / PE	50 V
Overvoltage category (IEC/EN 62477-1)	< 2000 m	III
	2000…5000 m	II
Overvoltage category (IEC/EN 61010-1/IEC/ EN 61010-2-201)	< 2000 m	II
	2000 …5000 m	II
Pollution degree	input circuit / ground	2
Protective separation IEC/EN 61010-1, 61010-2-201	input circuit / output circuit	yes
	input circuit / relay output	yes
Standards / Directives		
Low Voltage Directive		2014/35/EU, IEC/EN 61204
EMC directive		2014/30/EU
RoHS directive		2011/65/EU incl. 2015/863/EU
WEEE directive		2012/19/EU
Electrical safety		IEC/EN 61010-1. IEC/EN 61010-2-201
Process control equipment		UL 61010-1, UL 61010-2-201/ CAN/CSA C22.2 No. 61010-1-12, CAN/CSA-IEC 61010-2-201:18
Protective extra low voltage		PELV_IEC/EN 61010-2-201
Safety extra low voltage		SELV_IEC/EN 61010-2-201
Limitation of harmonic line currents		IEC/EN 61010-2-201

Type		**CP-S.1 24/40.0**
Electromagnetic compatibility		
Low-voltage power supplies, d.c. output – Part 3: Electromagnetic compatibility (EMC)		IEC/EN 61204-3
Interference immunity to		IEC/EN 61000-6-2
electrostatic discharge (ESD)	IEC/EN 61000-4-2	contact discharge air discharge, level 4, 8 kV / 15 kV (criterion A)
radiated, radio-frequency, electromagnetic field	IEC/EN 61000-4-3	80 to 1000 MHz, 10 V/m (criterion A), 1.4 to 6 GHz, 3 V/m (criterion A)
electrical fast transient / burst	IEC/EN 61000-4-4	level 4, 4 kV / 2 kV (criterion A)
surge	IEC/EN 61000-4-5	level 4, L/N 3 kV (criterion A); level 4, L, N / PE 4 kV (criterion A)
conducted disturbances, induced by radio-frequency fields	IEC/EN 61000-4-6	level 3, 10 V (criterion A)
voltage dips, short interruptions and voltage variations	IEC/EN 61000-4-11	class 3
harmonics and interharmonics	IEC/EN 61000-4-13	class 3 (criterion A)
conducted, common mode disturbances in the frequency range 0 Hz to 150 kHz	IEC/EN 61000-4-1	level 3, 10 V
Interference emission		IEC/EN 61000-6-3; IEC/EN 61000-6-4
limits for harmonic current emissions	IEC/EN 61000-3-2	class A
limitation of voltage changes etc.	IEC/EN 61000-3-3	compliant
information technology equipment radio disturbance characteristics limits and methods of measurement	EC/CISPR 32, EN 55032	class B
industrial scientific and medical (ISM) radio-frequency equipment electromagnetic disturbance characteristics limits and methods of measurement	EC/CISPR 11, EN 55011 EN 50204	class B
Voltage sags	SEMI F47-0706	passed
Federal Communications Commission	FCC15	compliant
EMC according DNV/GL	DNVGL-CG-0339	all locations including bridge and open deck class B
Weight		2.490 g

Technical diagrams

Data at T_a = 25 °C, U_{in} = 230 V AC and rated values, unless otherwise indicated

U/I characteristic curves of output at T_a = 25 °C

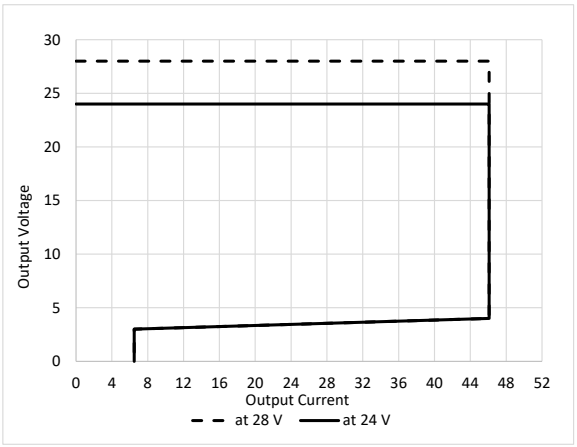

CP-S.1 24/40.0

Characteristic curves of temperature T_{out} = 24 V DC

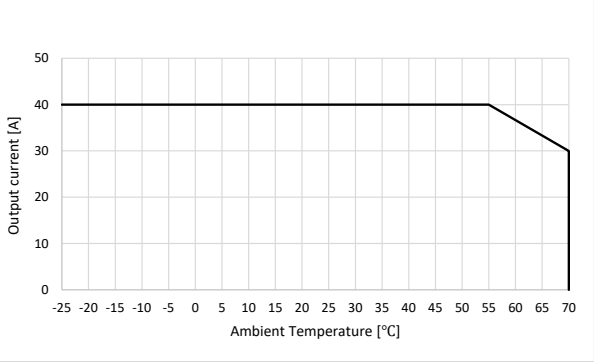

CP-S.1 24/40.0

The switch mode power supply CP-S.1 is able to supply at 24 V DC output voltage and at an ambient temperature of

- ≤ 60 °C the rated current of 40 A
- ≤ 60 °C a continuous output current of typ. ≤ 60 A for 5 s

With mounting position 1 (standard) and at ambient temperatures of > +55 °C the output power has to be reduced by 2 % per Celsius degree temperature increase. Deratings for other mounting positions on request.

At thermal overload the device will switch-off as soon as the internal temperature exceeds the acceptable level. The exact ambient temperature threshold depends on the mounting position and load of the power supply.

The device is equipped with an overtemperature protection function. It will switch-off as soon as the internal overtemperature protection function is activated.

Dimensions

in mm and inch

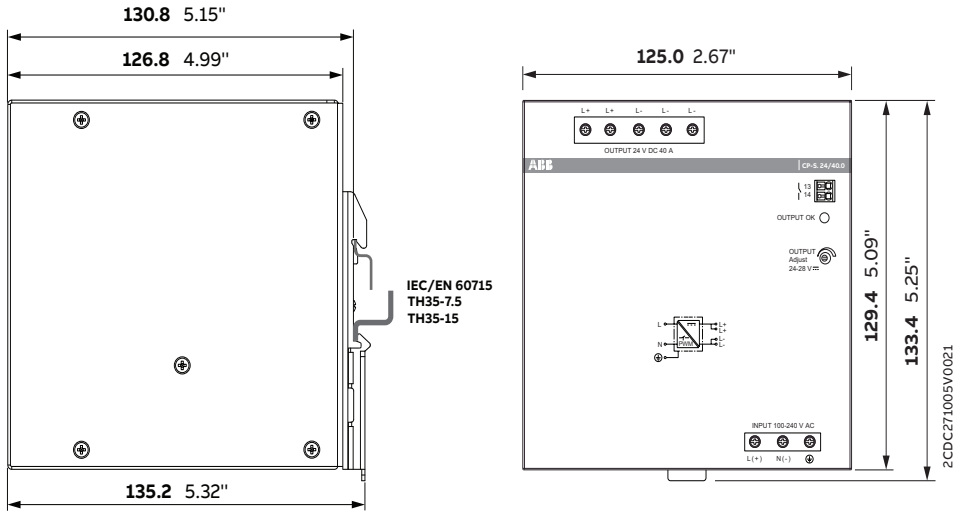

CP-S.1 24/40.0

Further documentation

Document title	Document type	Document number
Electronic relays and controls	Catalog	2CDC110004C0210
Operating and installation instructions CP-S.1	Instruction manual	1SVC320360M0000
CP-S.1 power supply range	Leaflet	1SAC200134W0001

You can find the documentation at **www.abb.com/lowvoltage** > Automation, Control and Protection > Power supplies.

CAD system files

You can find the CAD files for CAS systems at **http:/abb-control-products.partcommunity.com** > Low voltage Products & Systems > Control Products > Electronic Relays and Controls.

ABB STOTZ-KONTAKT GmbH
Eppelheimer Straße 82
69123 Heidelberg, Germany

abb.com/lowvoltage

Further information:

We reserve the right to make technical changes or modify the contents of this document without prior notice. With regard to purchase orders, the agreed particulars shall prevail. ABB AG does not accept any responsibility whatsoever for potential errors or possible lack of information in this document.

We reserve all rights in this document and in the subject matter and illustrations contained therein. Any reproduction, disclosure to third parties or utilization of its contents – in whole or in parts – is forbidden without prior written consent of ABB AG. Copyright© 2022 ABB AG.
All rights reserved

1SAC200141H0001 Rev. A (08/2021)