SI5000

Flow monitor

SID10ABBFPKG/US-100

Observe the changed pressure rating.

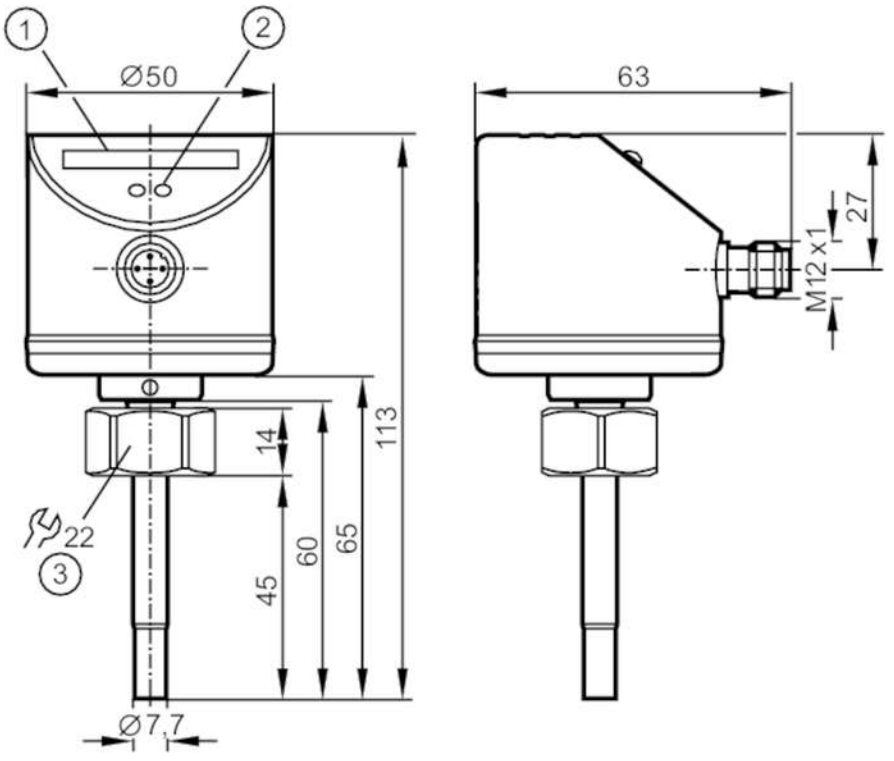

1 LED bar display
2 setting pushbutton
3 Tightening torque 25 Nm

Product characteristics		
Number of inputs and outputs		Number of digital outputs: 1
Process connection		M18 x 1,5 internal thread
Application		
Media		Liquids; Gases
Medium temperature	[°C]	-25...80
Pressure rating	[bar]	30
Liquids		
Medium temperature	[°C]	-25...80
Gases		
Medium temperature	[°C]	-25...80
Electrical data		
Operating voltage	[V]	19...36 DC
Current consumption	[mA]	< 60
Protection class		III
Reverse polarity protection		yes
Power-on delay time	[s]	10

SI5000

Flow monitor

SID10ABBFPKG/US-100

Inputs / outputs		
Number of inputs and outputs		Number of digital outputs: 1
Outputs		
Total number of outputs		1
Output signal		switching signal
Electrical design		PNP
Number of digital outputs		1
Output function		normally open / normally closed; (parameterisable)
Max. voltage drop switching output DC	[V]	2.5
Permanent current rating of switching output DC	[mA]	250
Short-circuit protection		yes
Type of short-circuit protection		pulsed
Overload protection		yes
Measuring/setting range		
Probe length L	[mm]	45
Liquids		
Setting range	[cm/s]	3...300
Greatest sensitivity	[cm/s]	3...100
Gases		
Setting range	[cm/s]	200...3000
Greatest sensitivity	[cm/s]	200...800
Accuracy / deviations		
Repeatability	[cm/s]	1...5
Note on repeatability		for water 5...100 cm/s; 25 °C Factory setting
Temperature drift	[cm/s x 1/K]	0.1; (for water 5...100 cm/s; 10...70 °C)
Temperature gradient	[K/min]	300
Switch point accuracy	[cm/s]	± 2...± 10; (for water 5...100 cm/s; 25 °C; Factory setting)
Hysteresis	[cm/s]	2...5; (for water 5...100 cm/s; 25 °C; Factory setting)
Response times		
Response time	[s]	1...10
Liquids		
Response time	[s]	1...10
Gases		
Response time	[s]	1...10
Software / programming		
Adjustment of the switch point		pushbutton

SI5000

Flow monitor

SID10ABBFPKG/US-100

Operating conditions			
Ambient temperature	[°C]	-25...80	
Storage temperature	[°C]	-25...100	
Protection		IP 67	
Tests / approvals			
EMC		EN 61000-4-2 ESD	4 kV CD / 8 kV AD
		EN 61000-4-3 HF radiated	10 V/m
		EN 61000-4-4 Burst	2 kV
		EN 61000-4-6 HF conducted	10 V
Shock resistance		DIN IEC 68-2-27	50 g (11 ms)
Vibration resistance		DIN EN 60068-2-6	20 g (55...2000 Hz)
MTTF	[years]	298	
Mechanical data			
Weight	[g]	246	
Dimensions	[mm]	M18 x 1.5	
Thread designation		M18 x 1.5	
Materials		stainless steel (1.4404 / 316L); stainless steel (1.4310 / 301); PC; PBT-GF20; EPDM/X	
Materials (wetted parts)		stainless steel (1.4404 / 316L); O-ring: FKM 80 Shore A	
Process connection		M18 x 1,5 internal thread	
Displays / operating elements			
Display		function	10 x LED, three-colour
Remarks			
Pack quantity		1 pcs.	
Electrical connection			

Connector: 1 x M12



SI5000

Flow monitor

SID10ABBFPKG/US-100

Connection

