LC80 EZ-LIGHT™ Controller

For operator-controlled activation of EZ-LIGHT products

Features





- Manually operated controllers for Andon, call-for-parts and machine status indication
- For use with PNP input EZ-LIGHT indicators
- Models available with toggle switches or rotary switch
- Versatile mounting options
- Toggle switch model can control up to 5 indicators simultaneously
- Consult factory about customized controller/indicator packages

Indicators and accessories sold separately

Models

Model	Description	Switch Function
LC80T	5 toggle switches	ON-OFF-FLASH
LC80R	12 position rotary switch	

Specifications

Supply Voltage:

Maximum: 30V dc

Minimum: Equal to the minimum voltage required for the indicator +2V dc

Example: TL50 operating voltage without controller: 18-30V dc; TL50 operating voltage with controller: 20-30V dc

Output Loads (Colors 1-5):

Toggle Switch Model (Solid ON Mode):

Individual outputs: 200 mA maximum for each individual output (when operated one at a time)

Multiple outputs: 700 mA maximum divided between the individual outputs (not to exceed 200 mA for any individual output)

Toggle Switch Model (Flash Mode):

Individual outputs: 200 mA maximum for each individual output (when operated one at a time)

Multiple outputs: 500 mA maximum divided between the individual outputs (not to exceed the maximum for any individual output)

Rotary Switch Model (Solid ON and Flash Mode):

Individual outputs: 200 mA maximum for each individual output

Construction:

Housing: Polycarbonate

Toggle switches: Chrome-plated brass

Rotary Switch: Nylon with phenolic knob

Environmental Rating:

IP54

Operating Conditions:

–30° to +50° C (–22° to +122° F)

Certifications:

Pending

Hookups

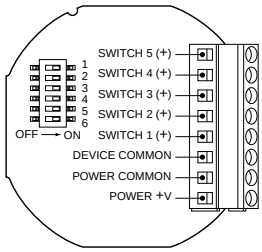





Connections: Field-wired through ½-14 port in housing. ½-14 NPSM cord grip is optional. Cord grip handles cable diameters 4.3 mm to 11.4 mm (see model BWA-CG.5-1)

: Activates Flash for corresponding color

: Activates ON Steady for corresponding color

For toggle switch models, the middle switch position will turn the corresponding color OFF. For rotary switch models, the two "OFF" positions will turn the indicator OFF.

DIP Switch Settings for Flash Rates*

DIP Switch Positions						ON Time (seconds)	OFF Time (seconds)
SW1	SW2	SW3	SW4	SW5	SW6		
Off	Off	NA	Off	Off	NA	1.0	1.0
On	Off	NA	On	Off	NA	0.5	0.5
Off	On (Off**)	NA	Off	Off (On**)	NA	0.05	1.0
Off	On	NA	Off	On	NA	0.05	0.5

* Some microprocessor controlled EZ-LIGHTS have a delayed startup and are not fully compatible with flash rates listed. Consult factory for more information.

** Rotary model

LC80T Dimensions

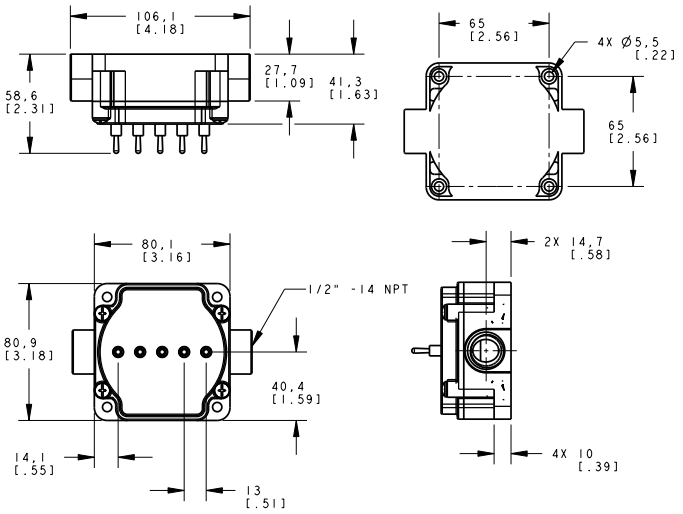

LC80R Dimensions

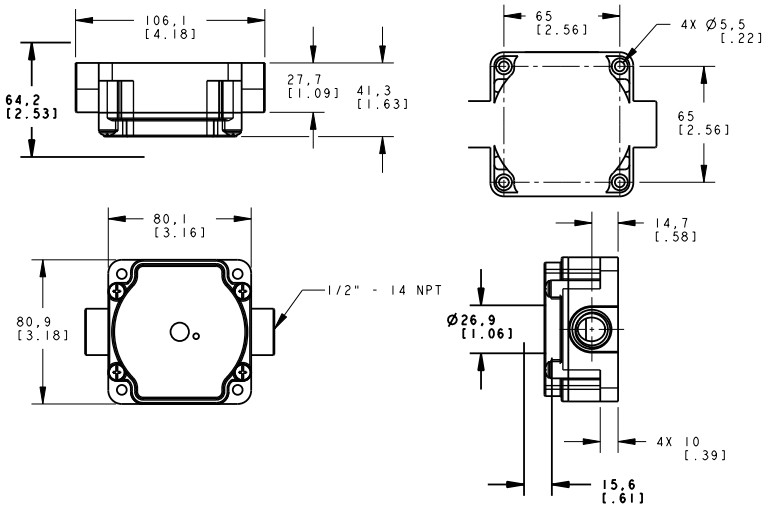

Mounting Hardware Included:

- 4 - M5 x 0.8 x 35 mm SS screws
- 4 - M5 x 0.8 SS Hex Nuts
- 4 - M5 lockwashers
- 4 - Nylon spacers (12.7 mm tall)

Mounting Brackets

Model	Features	Mounting System
SMBDX80D	• DIN-mount bracket • Hardware included to mount to controller • Material: ABS	

Mounting Systems - Elevated Mount

<table>
<tr><th colspan="2">Model</th><th>Features</th><th colspan="2">Mounting System</th></tr>
<tr><td colspan="2">SA-M30TE12</td><td rowspan="2">• Streamlined acetal stand-off pipe adapter/cover
• Connects between TL50 Tower Light (SA-M30TE12) or K50 (SA-M30E12) and ½” NPSM/DN15 pipe
• Mounting hardware included</td><td></td><td rowspan="4"></td></tr>
<tr><td colspan="2">SA-M30E12</td><td></td></tr>
<tr><td>Stainless Steel</td><td>Aluminum</td><td rowspan="4">• Elevated-use stand-off pipe (½” NPSM/DN15)
• Polished 304 stainless steel or anodized aluminum surface
• ½ NPT thread at both ends
• Compatible with most industrial environments</td><td rowspan="3"></td></tr>
<tr><td>SOP-E12-150SS
Length: 150 mm (6")</td><td>SOP-E12-150A
Length: 150 mm (6")</td></tr>
<tr><td>SOP-E12-300SS
Length: 300 mm (12")</td><td>SOP-E12-300A
Length: 300 mm (12")</td></tr>
<tr><td>SOP-E12-900SS
Length: 900 mm (36")</td><td>SOP-E12-900A
Length: 900 mm (36")</td></tr>
<tr><td colspan="2">SA-E12M30</td><td>• Streamlined acetal mounting base adapter/cover
• Connects between ½” NPSM/DN15 pipe and 30 mm (1-3/16”) drilled hole
• Mounting hardware included</td><td></td></tr>
</table>

WARNING . . . Not To Be Used for Personnel Protection

Never use this product as a sensing device for personnel protection. Doing so could lead to serious injury or death

This product does NOT include the self-checking redundant circuitry necessary to allow its use in personnel safety applications. A sensor failure or malfunction can cause either an energized or de-energized sensor output condition. Consult your Banner Safety Products catalog for safety products that meet OSHA, ANSI and IEC standards for personnel protection.

BANNER
more sensors, more solutions

Warranty: Banner Engineering Corp. will repair or replace, free of charge, any product of its manufacture found to be defective at the time it is returned to the factory during the warranty period. This warranty does not cover damage or liability for the improper application of Banner products. This warranty is in lieu of any other warranty either expressed or implied.