Midi free-standing Beacons / Permanent Light 826

Permanent Beacon RM 12-230VAC/DC GN



Part No.: 826.210.00

MECHANICAL DATA	
Height	200 mm
Diameter	98 mm
Materials	PC PC/ABS
Dome colour	Green
Housing colour	Black
Protection category	IP65
Connection	Insulation-displacement contac
cross-sectional area maximum	1,50mm² / 16AWG
Cable entry	Through hole
Cable entry maximum	d = 11 mm
Type of fixing	Tube mounting
Working temperature minimum	-20°C
Working temperature maximum	+50°C
Weight with packaging	300 g
Product weight	231 g

ELECTRICAL DATA	
Operating voltage	12-230V
Operating voltage type	AC/DC
Protection class	Protection class 2
Pollution degree	3
Overvoltage category	II
Isolation voltage	Ui = 250V; Uimp = 2.500V

OPTICAL DATA	
Light colour	Green
Service life optical	depends on bulb

APPROVAL DATA	
Conforms with CE	Yes
WEEE	Yes
Conforms with ATEX-directive	No
Conforms with CCC	Yes
Conforms with UL	cULus
UL Type Rating	Type 12
Conforms with FCC	No
Conforms with IC	No
EAC certificate available	Yes

! For additional installation and mounting information, refer to the appropriate user guide at www.werma.com. This printed copy is for information only and is subject to alteration.

Midi free-standing Beacons / Permanent Light 826

Permanent Beacon RM 12-230VAC/DC GN

Conforms with AS-I	No
ICAO Certification	No
Conforms with DNV	No
Conforms with RoHS CN	No
Conforms with VdS	No

DRAWING

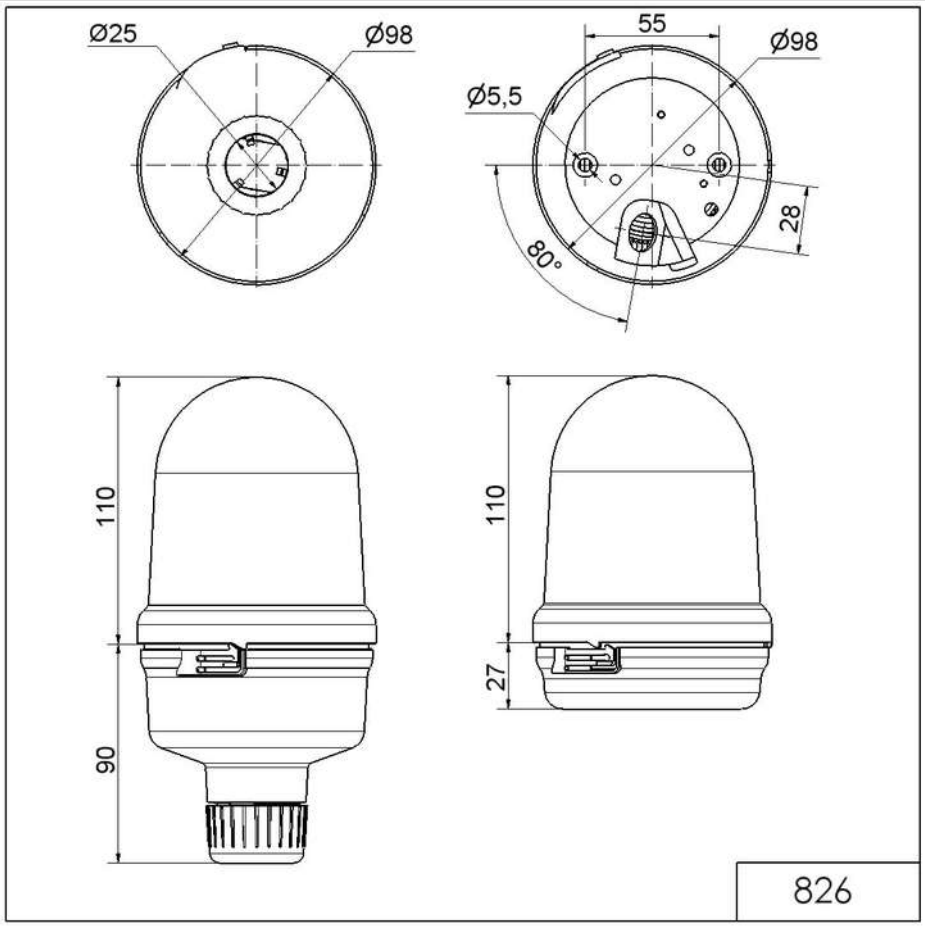

! For additional installation and mounting information, refer to the appropriate user guide at www.werma.com. This printed copy is for information only and is subject to alteration.